ELITE S Version
(8/16 Zone Control Communicator)

V9

Arrowhead
Alarm Products Ltd

Installation & Programming Guide

Proudly Designed and Manufactured in New Zealand

Arrowhead Alarm Products Ltd

PHONE: (09) 414 0085
FAX: (09) 414 0088
FREEPHONE: 0800 700 123

344b Rosedale Road
Albany
AUCKLAND

PO Box 303-096
AUCKLAND 1330
NEW ZEALAND

This ELITE S Version 9 alarm control panel has been designed to provide the most requested features for both the installer & the end-user. These features include ease of installation, ease of programming and user friendly operation all in a package which is reliable, functional and attractive.
Utilising many years of experience in the security industry and implementing valuable feedback, we are proud to provide you with a new generation of alarm controller. The ELITE S V9 is a New Zealand designed and built product which brings you the quality and features which you deserve at an affordable price. In addition to the the advanced design, only the highest quality components have been used in the production of this Alert panel to ensure the highest degree of reliability.
This manual will guide you through the installation and programming of your Elite S alarm panel. For additional information regarding the operating instructions and options, please refer to the "Elite S User's Guide".

Copyright by Arrowhead Alarm Products Ltd

December 2005 ELITE S V9.00 and above.
This manual relates to the Arrowhead ELITE S V9 alarm control panel software version V9.00 and above.

Disclaimer

Arrowhead Alarm Products Ltd make no warranties regarding the content of this document and assume no responsibility for any omissions or errors contained herein.
To the best of our knowledge the information contained in this manual is correct at the time of printing. Arrowhead Alarm Products Ltd reserve the right to make changes to the features and specifications at any time without notice in the course of product development.

Designed & Manufactured in New Zealand to Meet NZS:4301/93

CONTENTS

		Page No.
CONNECTION DIAGRAM		**5**
	Wiring to the Panel	5
INPUT OPTIONS		**6**
	Different Input Configurations	6
	Zone Wiring Examples	7
	Other Inputs	8
OUTPUTS		**8**
	Description of Outputs	8
	DTU Board	8
	Serial Board	8
ACCESSORIES		**9**
	Radio Receiver	9
	Voice Board	9
	Proximity Readers	10
	Night Monitor Keypad	12
KEYPAD INDICATIONS		**13**
	LED Keypad	13
	LCD Keypad	13
KEYPAD MEMORY DISPLAY		**15**
	LED Keypad	15
	LCD Keypad	17
KEYPAD ADDRESS ASSIGNMENT		**18**
	LED Keypad	18
	LCD Keypad	19
LCD KEYPAD LOCAL EDIT MODE		**20**
	Adjusting Backlighting and Buzzer Tone	20
	LCD Keypad Local Edit Mode	21
PROGRAM MODE ACCESS		**27**
	Accessing Program Mode	27
	Exiting Program Mode	28
LCD PROGRAM MENUS		**29**
	LCD Keypad Menu Programming	29
	LCD Keypad Main Menu Headings	32
	LCD Keypad Sub-Menu Headings	33
SPECIAL KEYPAD FUNCTIONS		**36**
	Special Arming Mode with Two Areas	36
	Chime Mode On/Off	36
PROGRAMMING GUIDE		**37**
USERS		**37**
	User Codes	37
	User Type	37
	User Areas	38
	User Arm/Disarm options	38
	User Program Mode Access	39
	Radio User Type & Panic options	39
	User Time-zone Control	40
	User Keypad assignment	40
	User Output Mask	41
	User turns Output On or Off	41
	Arm/Disarm 4+2 Codes	88
	Learn/Find and Delete Radio Key Codes	42
MISCELLANEOUS PANEL & CLOCK SETTINGS		**44**
	Installer Code	44
	Duress Digit	44
	Dial Delay	44
	Supervised Detector Timer	44
	Two Trigger Time	44
	Mains Fail Report Delay	44
	Receiver Fail Timer	44
	Upload/download Site Code Number	45
	Temporary Output Disable	45
	Miscellaneous Installer & Panel Options	45
	Hide User Codes	46
	Setting Time, Date & Daylight Saving	47

OUTPUTS 48
Miscellaneous Output Options 48
Output On Delay, Pulse, Reset & Chime Times 50
Output Voice Board Remote Control Start message 50
Un-Map an Output 50
AREAS 51
Area Arm and Special Function Options 51
Area Arm/Stay Pulse & Chirps to Outputs 52
Area Exit Delay Beeps to Keypads 54
Arm & Stay Exit Delay Time 54
Monitoring Account Code Number 55
Remote Arm/Disarm DTMF Code & Start Voice Message 55
Area Delinquency Time 56
Auto-Arm/Disarm Time-zone 56
KEYPADS 57
Keypad Area Assignment 57
Keypad Button Operations, Misc Beeps and LED Control 57
Keypad “ARM”, “STAY”, “A” & “B” Button Options 59
Keypad Number and “CONTROL” Button to Output Mask 62
Keypad “Panic” “Fire” & “Medical” Alarms to Outputs & KP Buzzer 63
Keypad Chime Timer 65
Keypad “Panic” “Fire” & “Medical” Alarms 4+2 Codes 88
KEY-SWITCHES 66
Key-switch Area Assignment 66
Key-switch Arm/Disarm Options 66
ZONES 67
Zone Area Assignment 67
Zone Alarm Type Options 68
Zone EOL & Vibration Settings 69
Zone Radio Type 70
Zone Alarms to Output & Keypad Buzzer Mapping 71
Armed & Stay Mode Entry Delay Times 74
Zone Lockout Time 74
Various Zone 4+2 Report Codes 88
Various Zone CID Report Codes 75
Zone Inactivity Timer 76
Learn/Find & Delete Radio Zone Codes 76
TIME-ZONES 77
Time-Zone Days 77
Time-Zone Start & Stop Times 77
DIALLER 78
Enable Dialler and Set Type of Dialling 78
Dialling Cycles, Auto-answer Ring Count 79
Time to First Test Call 79
Keypad & Output 1 Listen-in Options 79
Dialling Pre-fix Number 80
Keypad “Panic” “Fire” & “Medical” Alarms CID Report Code 80
Output, Microphone & Voice Kiss-off DTMF Remote Codes 80
Miscellaneous Voice Reporting Message Numbers 81
TELEPHONE NUMBERS 82
Programming Telephone Numbers 82
Reporting Formats 82
Dial Progress Options 83
Enable/Disable Miscellaneous Dialler Reports 85
Call Divert Numbers & Options 86
MISCELLANEOUS 4+2 CODES 88
Mains/Battery/Tamper/Duress & Arming 4+2 Codes 88
DIAGNOSTIC & DEFAULT OPTIONS 91
Display Software Version, Keypad Number, Keypad Areas 91
Display Active Time-zones, battery Voltage 91
Start Walk-Test Mode 91
Read or Write to DTU 91
Restore Defaults 92
Clear Memory Buffer 92
Start a Call-Back Call 92
PROGRAM SUMMARY GUIDE 93

QUICK START PROGRAM GUIDE 111

CONTACT ID CODE SUMMARY 114

CONNECTION DIAGRAM

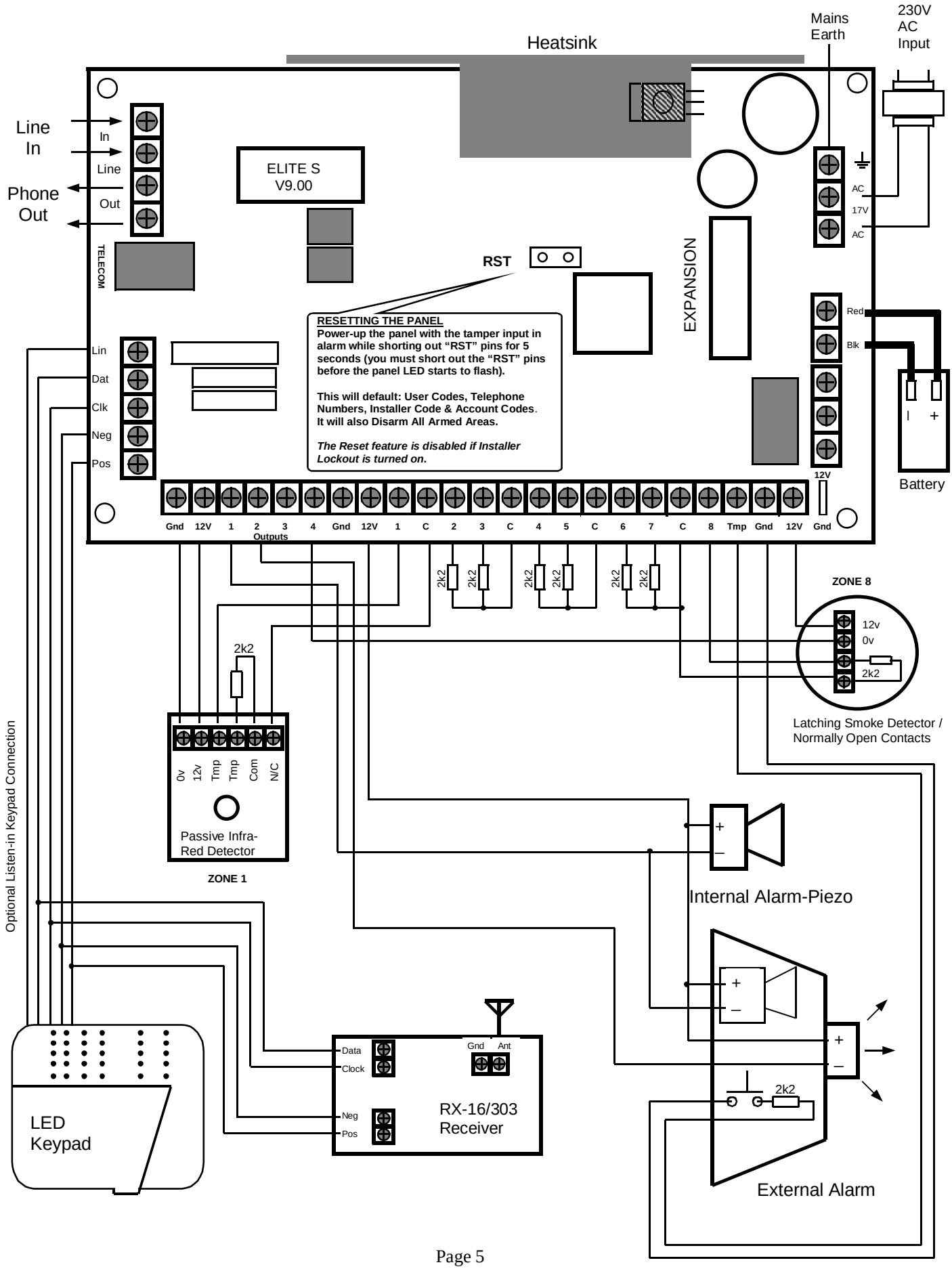

INPUTS

The ELITE S has 9 separate programmable monitored analogue inputs,

8 x Programmable, multi-state detection inputs
1 x Programmable tamper input (with optional Key-switch functions)

Each input must be terminated with the appropriate value or combination of end-of-line resistors, even if the input is unused.

ZONE INPUTS - Each of the 8 zone inputs can be assigned one of the following End of Line (EOL) configuration options,

Zone EOL Type (P125E)	Input Resistor	Comments
0	(Short circuit)	Loop EOL
1	1k (Brown, Black, Red)	Single EOL
2	1k5 (Brown, Green, Red)	Single EOL
3	2k2 (Red, Red, Red)	Single EOL
4	3k3 (Orange, Orange, Red)	Single EOL
5	3k9 (Orange, White, Red)	Single EOL
6	4k7 (Yellow, Violet, Red)	Single EOL
7	5k6 (Green, Blue, Red)	Single EOL
8	6k8 (Blue, Grey, Red)	Single EOL
9	10k (Brown, Black, Orange)	Single EOL
10	12k (Brown, Red, Orange)	Single EOL
11	22k (Red, Red, Orange)	Single EOL
12	2k2 Tamper, 4k7 Zone	Zone & Tamper
13	3k3 Tamper, 6k8 Zone	Zone & Tamper
14	2k2 Tamper, 4k7 Low Zone, 8k2 High Zone	Zone Doubling, with Tamper
15	4k7 Low Zone, 8k2 High Zone	Zone Doubling, No tamper

Type 0 (Short/Loop Circuit)

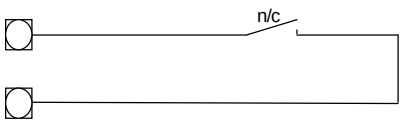

Type 1-11 (Single EOL no Tamper)

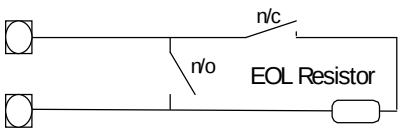

Type 12-13 (Single Zone with Tamper)

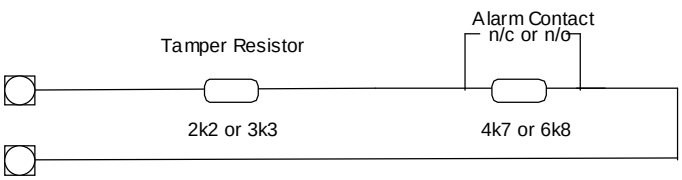

Type 14 (Zone Doubling with Tamper)

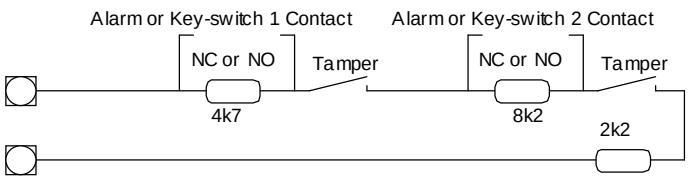

EXAMPLES OF ZONE WIRING OPTIONS

Short circuit loop, No EOL

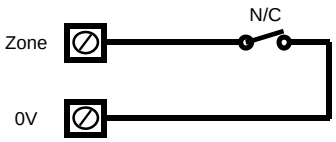

2k2 EOL, No Tamper

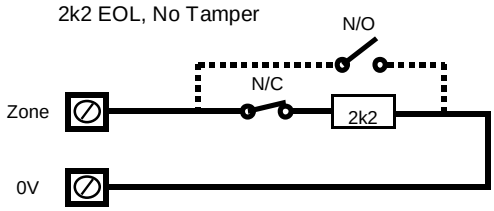

Type 12 Configuration. Alarm & Tamper monitoring (contacts can be N/C or N/O)

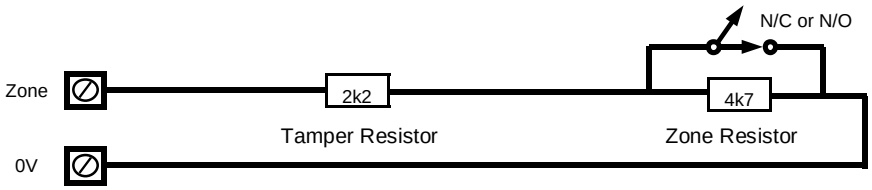

Type 15 Configuration. Zone Doubling, NO Tamper (contacts can be N/C or N/O)

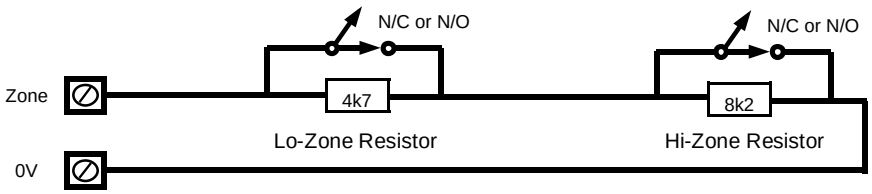

Wiring a PIR Detector (N/C) for Alarm & Tamper Monitoring

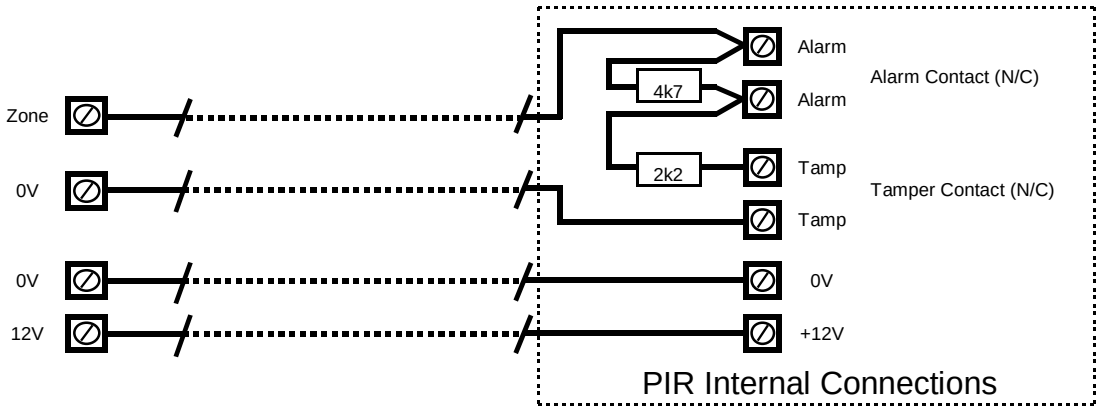

Wiring a Smoke Detector (N/O) for Alarm & Tamper Monitoring

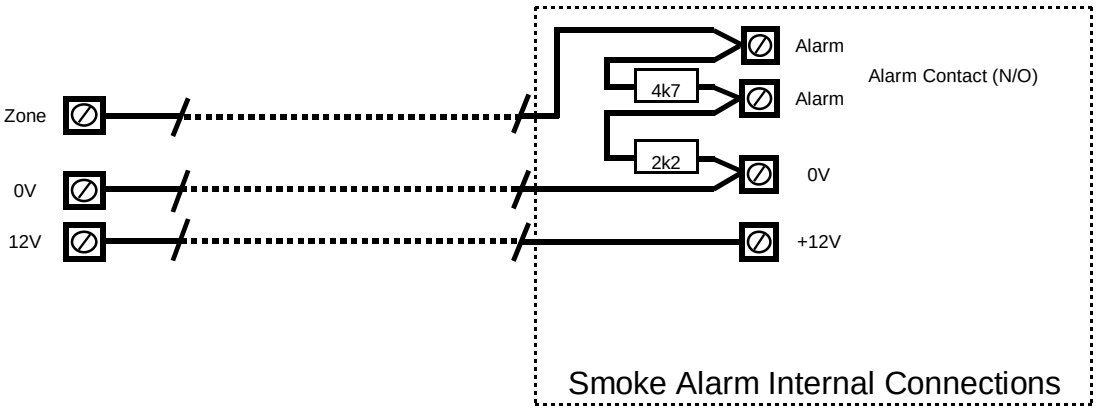

INPUTS cont.

TAMPER - A 24Hr tamper circuit is available for monitoring system tampers. This Tamper circuit is programmable as either normally closed loop or 2k2 EOL supervision (the default is normally closed loop). Any Tamper alarms on this input are mapped to alarm outputs in the same manner as for detection zones 1-16. Using Dual-End-of-Line resistors (Refer to Zone Type 15 on Page 6) the Tamper input can also provide two key-switches. The Low key-switch (4k7 resistor) will be Key-switch 1 while the High key-switch (8k2 resistor) will be Key-switch 2.

In addition to the Zone & Tamper inputs, you will find the following additional inputs on the control PCB;

AC - Connect the 17VAC yellow wires (no polarity) from the transformer to the terminals marked AC on the PCB. The panel includes a mains transformer rated at 1.4 amps at 17 VAC.

EARTH - Connect the mains earth to the appropriate terminal on the mains terminal block in the control box cabinet. Also connect a lead from this earth point to the terminal marked with the Earth symbol (next to AC terminals) on the panel PCB.

BATTERY - Connect a sealed lead acid rechargeable 12VDC battery to the terminals labelled red and black on the control panel being careful to observe the correct polarity. The minimum recommended battery capacity is 7 amp hours. Battery charge current at these terminals is limited to 300mA maximum. The battery connection is protected against short circuits by a thermal fuse (F1). The panel performs a dynamic load test on the battery every 15 seconds and if it fails the test at any time it will flash the Battery LED.

LINE IN - These terminals are used to connect the panel to the incoming telephone line. The dialler uses this line for reporting alarm events. An ADSL filter will be required before the Line In terminals if ADSL is present in the building.
LINE OUT - These terminals are used to connect telephones and other communication equipment to the incoming phone line via the panel dialler circuit. The telephone line is passed through the controller to ensure that the line is available to the controller when it is required.

OUTPUTS

12 VOLT OUTPUTS - There are three 12VDC outputs on the panel PCB. These 12 volt outputs are regulated and Thermal fuse protected against short circuits. The accessory outputs are marked 12V and 0V, while the keypad buss 12V supply is labelled “POS” & “NEG”. The 12V outputs are supplied by thermal fuses F2 & F3. The recommended maximum total load that should be drawn from all of the 12V outputs is 1A.

OUTPUTS 1 & 2 - These fully programmable, high current, open drain (high-going-low) type FET outputs capable of switching up to **1.5A @ 12VDC.** These 2 outputs are normally set as switched outputs, providing power for 12V sirens or piezos. If required, these outputs can be programmed to be siren outputs designed to drive an 8 ohm 10 watt horn speaker on each output (see P37E option 1). Also if a horn speaker is connected to **Output #1** you may select (Refer to P175E 7E program address) the listen-in feature to this output as well so that the dialling sequence can be heard at the speaker.

OUTPUT 3 - This is a low current, open collector (high-going-low) type transistor outputs capable of switching up to 4**00mA**. Like Outputs 1 & 2 it is fully programmable.
NOTE: - ***Connecting devices which draw current in excess of 400mA to output 3 will damage the output.***

OUTPUT 4 - This is a relay output (rated 1A@30VDC) with single pole changeover contacts. If required, the Common (C) contact of the relay can be connected to either 12V or 0V via Link 1. Like Outputs 1 & 2 it is fully programmable.

KEYPAD PORT - The terminals marked *POS, NEG, CLOCK, & DATA* make up the communications port which the keypads and other intelligent field devices use to talk to the controller. The terminals are connected to corresponding terminals on the remote devices. The **"lin"** terminal is only used by the keypads and utilises a fifth wire to provide a communicator “**listen-in”** facility. This feature is particularly useful when servicing monitoring faults. The keypad 12V supply (*POS,NEG*) is protected by fuse F3.

EXPANSION PORT - The expansion port allows connection of the RS232 serial board, 90 second Voice Board, DTMF Board or EEPROM data transfer board (DTU). The serial board allows direct connection of a PC running the Upload/Download software. The 90 second voice board allows voice messages to be programmed for monitoring purposes. The Voice & DTMF boards allow Touchtone Code remote control via a telephone. The DTU allows for program “Cloning” from one panel to another.

INSTALLING RX-16 RADIO RECEIVER

The panel can have wireless capability via the Arrowhead RX-16 receiver module. The receiver will add wireless capability to your system in the form or wireless PIR detectors, Wireless Radio-key transmitters and wireless reed switch transmitters.
The RX-16 connects to the same communications port as the keypads. The RX-16 is available in 3 frequencies, 303.875mhz, 433.92mhz or 27mhz. Multiple RX-16's can be connected to the panel to increase the coverage range if desired.
The green LED fitted to the RX-16 receiver will flash at 1 second intervals when in "Learn" mode (see P18E & P164E). The LED will also turn on when it is receiving an actual radio transmission (On Steady).

INSTALLING 90 SECOND VOICE or DTMF BOARD

The panel can also be fitted with a 90 second Voice Board or DTMF module. The Voice board stores either alarm event messages for Voice dial monitoring and /or status messages for use with Command Control. The DTMF board provides decoding of keypad numeric entries from a remote telephone. The panel Voice or DTMF Boards are installed directly onto the motherboard via the "SERIAL" socket.

Installation procedure for the Voice or DTMF Board module is as follows.

1 Power-down the panel fully before starting the installation procedure.
2 Carefully plug the Voice or DTMF Board into the SERIAL socket (it will only fit in one direction).
3 Power-up the panel.

Speech message programming
Once you have installed the Voice Board you can record your personalised speech messages into the module with the speech programmer (the programmer plugs onto the 10 way strip connector on the voice board, observe polarity with the locating pin).

Before programming your voice messages you should work out a list of the messages you would like to be sent for each alarm type and write them down in order, giving them a message number. These messages should then be recorded in the same order they are written down so you know what the message number is when programming alarms to messages.
To record your messages once the programmer is installed, first press the reset button on the side of the Voice Board, then hold the programmer about 10 cm away from the mouth and speak clearly at normal level into the microphone while holding down the "REC" button. When you reach the end of your message release the REC button. (**NOTE:** Each individual message must be longer that 2 seconds duration). When recording your voice alarm message, you must ensure that you clearly identify the origin of the call. You can play the message back through the programmer by first pressing the reset button then by pressing the "PLAY" button momentarily. Because the panel can address many individual voice messages you must store individual messages at what is known as recording slots within the Voice Board. These recording slots are recorded sequentially, one message starting where the other finishes. Every time you press and release the REC button on the programmer, you create an end of message marker. These markers are used to define the recording slots within the Voice Board and can be of varying length according to each message duration.

To re-record your messages you must first press the "RESET" button on the speech module to get back to recording slot # 1. Once you are at slot # 1 you can re-record your messages in order as required.
NOTE: When recording multiple messages you only press the "RESET" button once at the beginning then record all messages sequentially as stated above. When you have finished recording all of your messages you can then press the "RESET" button to allow play-back of the recording messages for verification purposes.
When you have finished recording your alarm messages, unplug the programmer and the process is complete. You must now go to the program addresses and assign the individual messages to the specific functions.

DTMF BOARD

The panel can be supplied from the factory with the DTMF Decoder fitted onto the main control board. If you have purchased the model with the DTMF Decoder on-board you have all of the features described below for the optional DTMF Board without having to fit it. However, if the model you have does not have the DTMF Decoder fitted you will need to fit the DTMF Board to get the features.
The **DTMF Board** does not have speech capability but does have a decoder to accurately decode the buttons from a touchtone telephone. The DTMF board can allow remote Arm/Disarming and remote control of the outputs using 4 digit codes. Instead of voice prompts the remote control features are enunciated by one long beep for ON and three short beeps for OFF.
For example, if you had a code of 1234 for area A remote Arm/Disarm (P63E1E) and you entered this code at the remote telephone after the panel had answered the call, if Area A was currently Armed the panel would send a long beep to indicate that it was Armed or On. By now pressing the <*> button on the telephone the panel will disarm area A and return three short beeps to indicate that it is now Disarmed or Off.

It will also allow alarms to be kissed off by a 4 digit code to secure the kiss-off procedure when in Domestic Alarm reporting format. If the on-board DTMF Decoder or the optional DTMF Board are fitted, you must use the <#> button to kiss-off any Domestic Alarm reports. If a code is programmed at location P175E14E, you must use that code followed by the <#> button to kiss-off the domestic alarm reports.
If you make a mistake when entering the kiss-off code, pressing the <#> button will clear all previous digits received at the panel and you can now enter in the correct code.

NO ON-BOARD or OPTIONAL DTMF BOARD

If the panel does not have the on-board DTMF Decoder and the DTMF Board is not fitted, you cannot perform any remote control functions regarding arming/disarming or outputs but you are still able to kiss-off a Domestic Alarm report by using any button on a pushbutton (DTMF) telephone.
With no DTMF Decoder on the panel it is unable to decode actual single digits from the telephone but the panel can differentiate between single tones (as produced by an answer-phone or dial tones) and the complex tones produced by DTMF telephones.

INSTALLING PROXIMITY READER

There are three proximity readers that can be connected to the control panel. They are;
1-Arm Reader
2-Proximity only Access Reader
3-Proximity and keypad (PIN) Access Reader.

The ARM Reader is generally to be used for selective arming or disarming of either Area “A” or “B” or both. By presenting a valid access tag or card to the reader the user can then arm or disarm the panel using the “A” & “B” buttons on the reader. On presenting a valid tag to the reader, the current status of Areas A & B will be shown on the two LED’s. The user has 4 seconds to make a new selection before the reader will timeout and the tag will have to be re-presented again. The Areas allowed to be controlled by the user must be programmed by the installer. If the User is allowed to fully Arm or arm Stay Mode then they can cycle through the various states (eg Disarmed, Full Armed, Stay Armed). As the “A” or “B” button is pressed the associated LED will change to indicate the new state, eg if the Disarmed state was selected the LED will be GREEN, If the Armed state was selected the LED will be RED and if Stay Mode was selected the LED would be flashing RED. Four seconds after the last button was pressed the reader will action the new armed status and the LED’s will turn off. If the reader has also been programmed to allow the “1& 3 PANIC” function at that keypad number a “PANIC” alarm will be generated if the “A” & “B” buttons are pressed simultaneously (see P72E option 5).
NOTE: From the disarmed state you can select Armed or Stay modes but if already Armed or in Stay Mode you MUST disarm first (letting the reader timeout) before you can select a new armed state.

The second reader is generally going to be used as an access control reader although if the tag is allowed to Arm/Disarm the alarm then this will also happen when the tag is presented. For access control, if a tag or card is presented to the reader the associated door lock will release via an output on the control panel. There is also an output at the reader which can be used to unlock the door if desired (see drawing on following page for details). The output number at the reader follows the keypad address number, eg if the reader has been assigned to keypad address 5, the output at the reader will follow all programming associated with output 5.

The third reader is generally going to be used as an access control reader as well although if the tag is allowed to Arm/Disarm the alarm then this will also happen when the tag is presented. This reader combines a proximity reader with a full keypad. Depending on program options the reader can be set-up to operate on a proximity tag or card only, on entering of a valid user code only, or on presentation of the tag/card followed by the user code (PIN). If the presented tag requires a PIN number to be entered, the LED on the reader will flash for 5 seconds after a valid tag to indicate that the PIN number should now be entered. There is also an output available on this reader that follows the same addressing functionality as described above.
If the two button “PANIC”, “FIRE” or “MEDICAL” functions are programmed to the keypad (see P72E Options 5,6 & 7) these manual alarms can be generated at the reader by pressing “1” & “2” for “PANIC”, “3” & “4” for “FIRE” and “5” & “6” for “MEDICAL” alarms.

On each of the three readers there is an optional input (see drawings on following page). This input is not EOL monitored so it should only be used for non-critical monitoring functions, eg monitoring an exterior gate to show if it is currently opened or closed. A zone can be programmed to use this input for its trigger (see P122E Option 4) so that the state of the input can be displayed on a keypad. The inputs are linked to the selected keypad address programmed into the reader. For example if the reader being used was programmed as keypad # 1, then the input can be assigned to zone 1 or 9 (at location P122E), if the keypad address was # 8, the input can then be assigned to zone 8 or 16.
Also, the LED on reader types 2 & 3 can be linked to an output so that special functions may be displayed at the reader if desired (see P98E).
Each reader must have a unique keypad address number from 1-8 assigned so that the various program options can be assigned. This is explained in detail on Page 65.
NOTE: The proximity readers flash out the assigned keypad address number on the LED whenever the panel is in “Installer Program” Mode. This allows quick identification of the assigned address for each reader.

PROXIMITY READERS

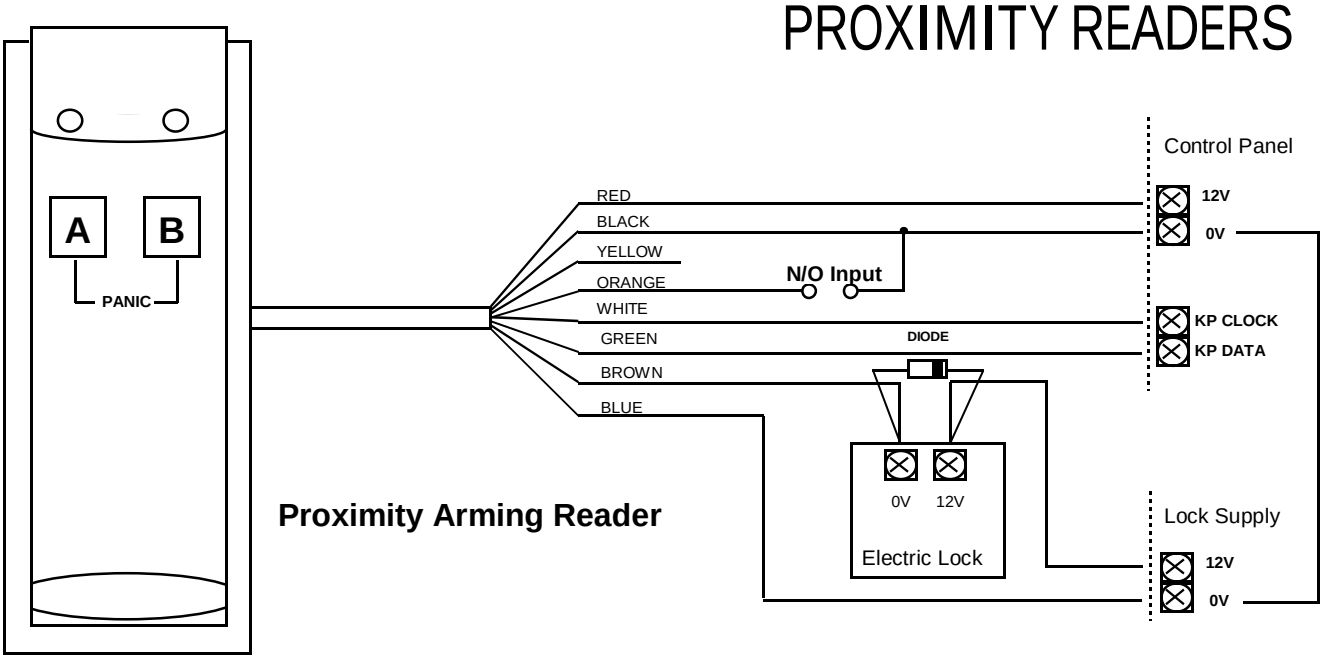

Proximity Arming Reader

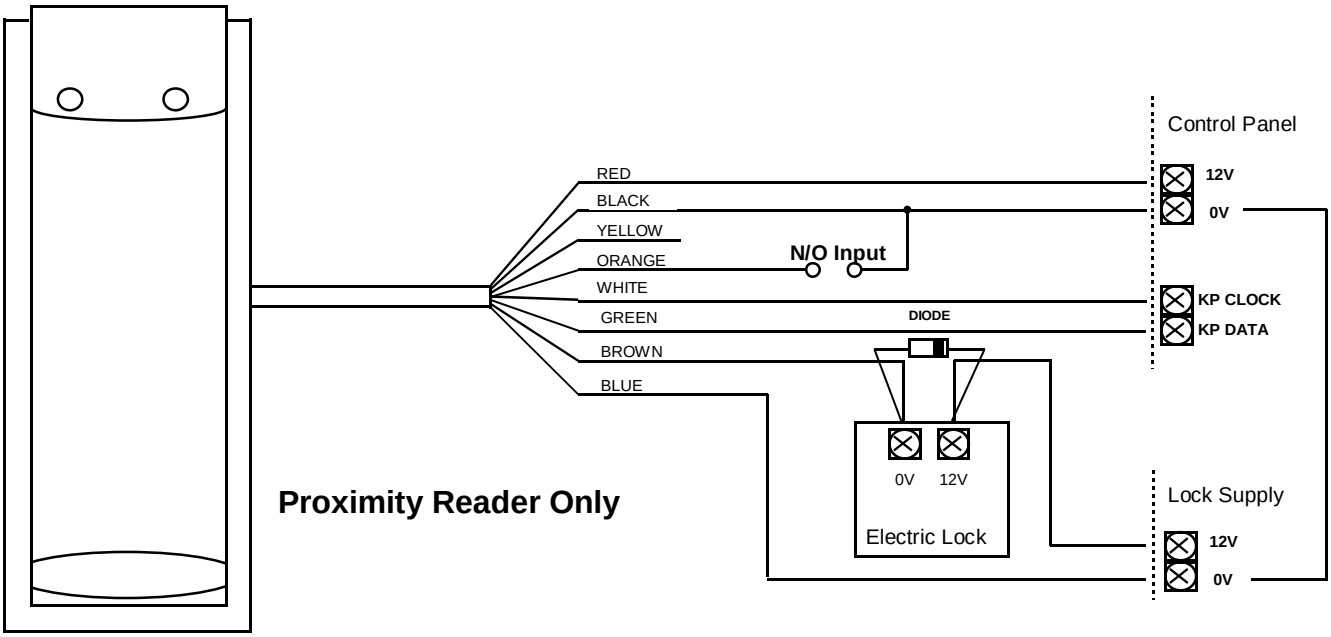

Proximity Reader Only

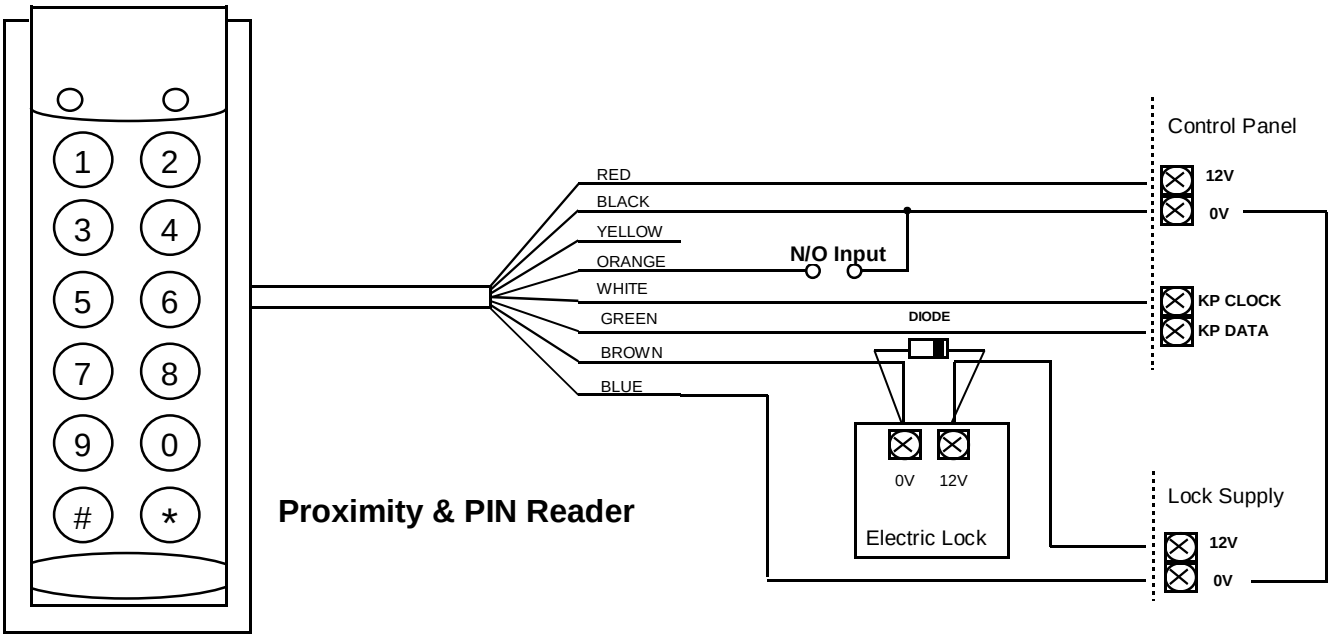

Proximity & PIN Reader

NIGHT MONITOR KEYPAD

The Night Monitor Keypad is designed to be a simple night arming station typically used in a bedroom situation.

By pressing either of the <Night Monitor> buttons the alarm Stay Mode can be armed or disarmed. If both buttons are pressed simultaneously, a Panic Alarm can be generated. A 4 way DIP switch on the rear of the unit sets various options. The DIP switch functions and the programming requirements are detailed below.

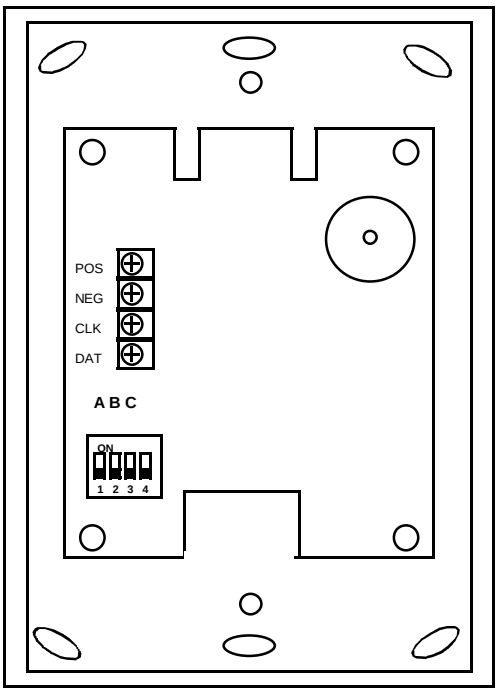

Rear View

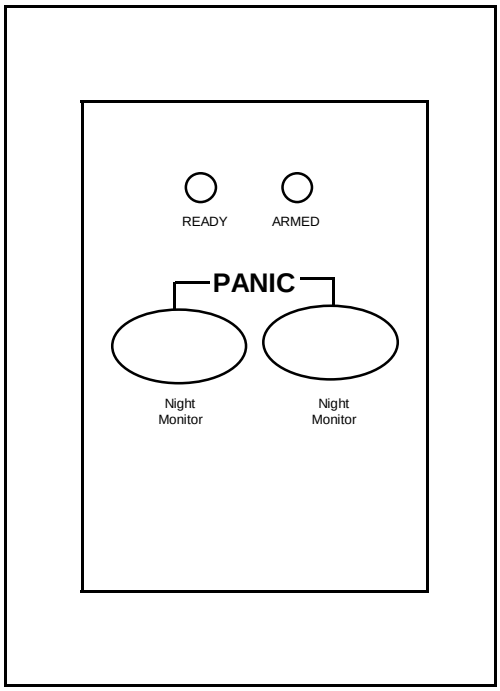

Front View

The Night Monitor keypad can be set to keypad addresses 5-8 by using Switches 1 & 2. Refer to chart below.

DIP Switch â	1	2
KP No: 5	OFF	OFF
KP No: 6	ON	OFF
KP No: 7	OFF	ON
KP No: 8	ON	ON

Switch 3 is unused on the ELITE S. It is used to force the armed LED to follow area A or B on other control panels.

Switch 4 MUST be OFF (if Switch 4 is ON the unit will work with earlier version 4 & 5 control panels).

<u>Night Monitor Panel Programming</u>

The Night Monitor button is designed to arm or disarm Stay Mode. The Stay Mode Area is assigned to the keypad at location P76E.
The functions of the button are programmed at location P77E (eg for the button to Arm Stay Mode and be able to Disarm Stay Mode at all times you must have options 2 & 4 ON).

The “ARMED” LED function is programmed at location P71E. For example if the Night Monitor keypad is only assigned to area A and you only want the Armed LED to show the status of area A you should turn on Option 1 (Area A) at location P71E for the address assigned to the Night Monitor keypad.

If both Night Monitor buttons are pressed simultaneously, it is possible to generate a “PANIC” alarm. To enable the panic alarm function for the keypad number assigned you must have option 3 turned on at location P72E.

ELITE S 16 ZONE LED KEYPAD

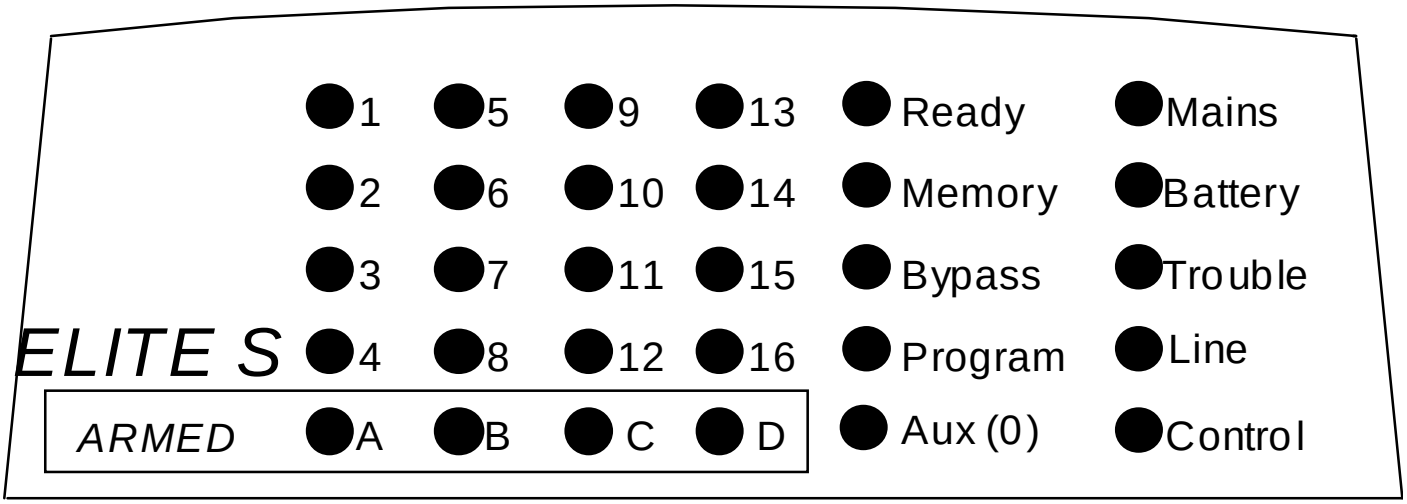

Standard ELITE S Keypad Window Layout

When the Panel is displaying codes and address values in program mode it may be necessary to display the 0 digit. As there is no Zone indicator for 0 the "AUX (0)" indicator is used to show the number “0”.

The Chart below gives details on the various indicators on the LED keypad and what they mean.

LIGHT\INDICATION ä â	OFF	ON STEADY	FLASHING
READY	Zone Unsealed	All Zones Sealed	-
MEMORY	Normal	Memory Display Mode	New Memory Event
BYPASS	Bypass Off	Zone Bypass Mode Active	Zone/s Bypassed
PROGRAM	Run Mode	Client Program Mode	Installer Program Mode or Control Function Active
AUX (0)	Chime Mode ON	Chime Mode OFF	-
MAINS	-	Mains (AC) OK	Mains (AC) Fail
BATTERY	-	Battery OK	Battery Low
TROUBLE	Normal	Trouble (Tamper) Alarm Active	New Trouble (Tamper) Alarm
LINE	Telephone line is OK	Dialler is currently making a call	The Telephone line has been cut or the call was not completed
CONTROL	Control Function Off	Control Mode On	
ZONES 1-16	Zone Secure	Zone Unsealed (Not Ready)	Zone in Alarm
ARMED A	Partition A Disarmed	Partition A Armed	Partition A Stay Mode
ARMED B	Partition B Disarmed	Partition B Armed	Partition B Stay Mode
ARMED C	Spare		
ARMED D	Spare		

ELITE S LCD KEYPAD

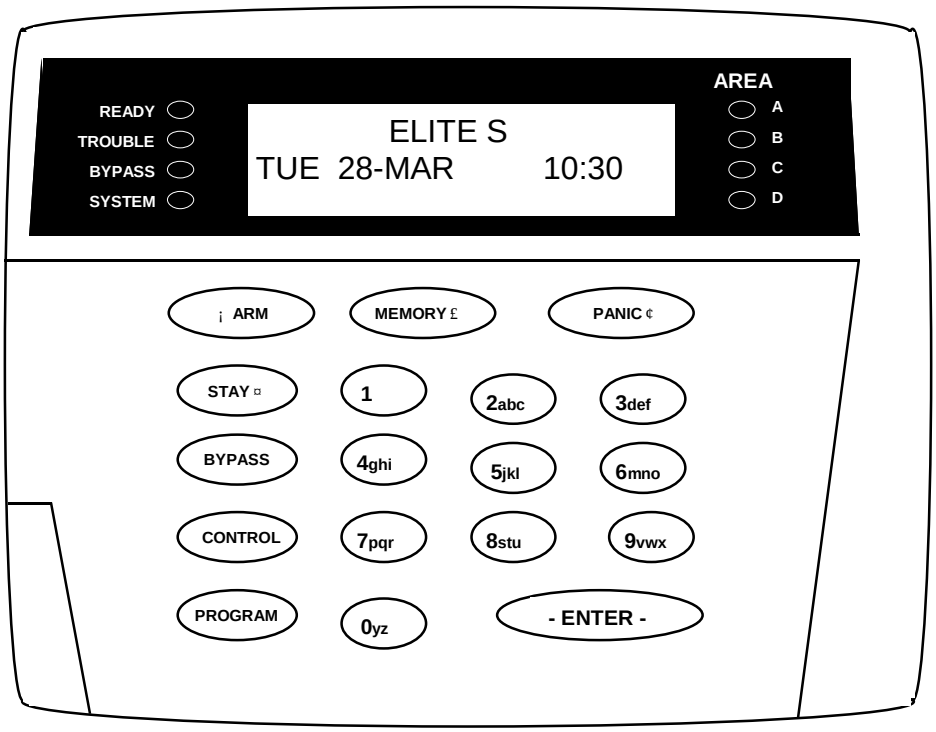

The Chart below gives details on the various LED indicators on the keypad and what they mean.

LIGHT\INDICATION ä â	OFF	ON STEADY	FLASHING
READY	Zone Unsealed	All Zones Sealed	-
TROUBLE	Normal	Trouble (Tamper) Alarm Active	New Trouble (Tamper) Alarm
BYPASS	Bypass Off	Zone Bypass Mode Active	Zone/s Bypassed
SYSTEM	Normal	Current System Alarm	New System Alarm
ARMED A	Partition A Disarmed	Partition A Armed	Partition A Stay Mode
ARMED B	Partition B Disarmed	Partition B Armed	Partition B Stay Mode
ARMED C	Spare		
ARMED D	Spare		
Zones 1-16	Zone status (unsealed) is indicated on the LCD module		

LED KEYPAD MEMORY VIEW MODE

CURRENT SYSTEM ALARMS

When viewing the memory event buffer at the keypad by pressing the “MEMORYÇ” button, the first thing that will always be displayed are any Current System Alarms that are active. The Current System Alarms are indicated by the Memory/Mains & Battery LEDS being on plus a zone LED from 1-8 to indicate the system alarm/s present. If no Zone LED’s are on at this time, it means that there are no current system alarms. If a zone LED or LED’s are On then this indicates system alarms that have not yet cleared. The zone LED’s 1-8 are pre-defined as to what system alarm they will display. These system alarm indications are shown in the table below. Following the display of current system alarms the panel will then sequence through the 255 historical memory events starting at the most recent event.

CURRENT SYSTEM ALARMS			
LED # 1	**Battery Low**	**LED # 5**	**Radio Pendant Battery Low**
LED # 2	**Mains, 12V Fuse or Output Failure**	**LED # 6**	**Supervised Detector Failure**
LED # 3	**Telephone Line Failure**	**LED # 7**	**SensorWatch or Delinquency Alarm**
LED # 4	**Radio Detector Battery Low**	**LED # 8**	**Dialler Kiss-off Failure**

HISTORICAL MEMORY EVENTS

Following the “Current System Alarms” the panel will display the historical memory events. The panel stores the most recent events, (up to 255), including all alarm events, all system events such as mains failure etc as well as arming by Area. The memory events are displayed via the standard keypad with the most recent event shown first and subsequent events following in descending order from newest to oldest.
The "MEMORY" light will be on while the memory display mode is active. To view events simply press the “MEMORYÇ” button. The keypad will beep and the display is advanced to the next event every time the “MEMORYÇ” button is pressed. When all events in memory have been displayed the keypad will exit memory mode and return to the normal idle state. To cancel the memory display just press “ENTER”. If the “ENTER” button is not pressed and the display mode is not advanced to the last memory event, the keypad will automatically exit memory display mode after approximately 20 seconds. The memory light will turn off once the memory display mode has been exited. The MEMORY LED flashes when there is a new event in memory and it will stop flashing once the event has been viewed or the panel is armed.

The Chart below gives details on the various alarms and what LED indicators are used to display them.

HISTORICAL EVENT DISPLAY CHART			
EVENT	**DEVICE**	**INDICATOR**	**STATUS**
ACTIVATION	Zones 1-16	LED's 1-16	On Steady
BYPASS	Zones 1-16	BYPASS LED's 1-16	On Steady On Steady
DETECTOR TAMPER (SHORT CIRCUIT)	Zones 1-8	TROUBLE LED's 1-8	Flashing On Steady
DETECTOR TAMPER (OPEN CIRCUIT)	Zones 9-16	TROUBLE LED's 9-16	Flashing On Steady
CABINET TAMPER	Cabinet or Satellite Siren	TROUBLE	Flashing
WRONG CODE ALARM	Code Tamper at Keypad #	TROUBLE LED’s 1-8	Flashing On Steady
CROW KEYPAD TAMPER SWITCH ACTIVATED	Keypad Tamper Alarm at Keypad #	TROUBLE LED’s 1-8	On Steady On Steady
LOW BATTERY	Controller Battery	BATTERY	Flashing

LED KEYPAD VIEW MEMORY MODE cont.

HISTORICAL EVENT DISPLAY CHART-Continued			
EVENT	**DEVICE**	**INDICATOR**	**STATUS**
MAINS FAILURE	Controller Mains Supply	MAINS	Flashing
12V Output FAILURE (F2 or F3)	Controller on-board Thermal fuses activated	MAINS LED 1	Flashing On Steady
OUTPUT 1 or 2 FAIL (Only applies if siren or strobe connected)	Wires to Output 1 or 2 have been cut	LED's 1 or 2 TROUBLE MAINS	On Steady On Steady On Steady
LOW BATTERY-ZONE (Wireless detector)	Radio Zone Zone 1-16	BATTERY LED's 1-16	Flashing On Steady
LOW BATTERY-PENDANT (wireless Transmitter)	Radio Key User 21-100	BATTERY LINE CONTROL	Flashing Flashing On Steady
SENSORWATCH TIMEOUT	Zone 1-16	LED's 1-16 TROUBLE CONTROL	On Steady Flashing Flashing
SUPERVISED RADIO TIMEOUT	Zone 1-16	LED's 1-16 TROUBLE BYPASS	On Steady Flashing Flashing
RF FAILURE	No RF Activity	TROUBLE AUX (0)	Flashing Flashing
ARM DELINQUENCY ALARM	Area A or B not armed within programmed number of days	TROUBLE CONTROL	Flashing Flashing
DURESS ALARM	Duress Alarm (at Keypad #)	TROUBLE LINE LED's 1-8	Flashing Flashing On Steady
KEYPAD PANIC	Panic Alarm at Keypad	LINE LED's 1-8	Flashing Flashing
PENDANT PANIC	Radio Panic Alarm	LINE LED's 9-16	Flashing On Steady
KEYPAD FIRE	Fire Alarm at Keypad	LINE CONTROL LED's 1-8	Flashing Flashing On Steady
KEYPAD MEDICAL	Medical Alarm at Keypad	LINE BYPASS LED's 1-8	Flashing Flashing On Steady
ARMED	Area "A" Armed	"A"	On Steady
ARMED	Area "B" Armed	"B"	On Steady
STAY MODE ON	Area "A" in Stay Mode	"A"	Flashing
STAY MODE ON	Area "B" in Stay Mode	"B"	Flashing
TELEPHONE LINE FAIL	Panel Dialler	LINE	On Steady
EXCESSIVE RE-TRIES	Panel Dialler	LINE LED 1	On Steady On Steady
FAILURE TO GET A KISSOFF	Panel Dialler	LINE LED 2	On Steady On Steady
WALKTEST MODE	Manual Walk-test Mode	MAINS BATTERY LINE LED's 1-16	On Steady On Steady On Steady On Steady

LCD KEYPAD VIEW MEMORY MODE

The LCD Keypad has similar operational functions to the LED keypad with one notable exception, when displaying Memory Events in “Memory Mode” it will display the events using plain text messages with the Time & date that the event occurred.
This makes the fault diagnosis much easier. On an LED keypad only the ARM indications are displayed (the disarm is removed from the display) but with the LCD keypad all events can be displayed (including when the system was disarmed and by who).

To access “Memory Mode” using the LCD keypad, press the “MEMORY ã” button.

There are two parts to the Memory Display Mode. They are;

CURRENT SYSTEM ALARMS

If there are any current “SYSTEM” alarms, they will be displayed first under the heading of “CURRENT ALARMS”. There are up to 8 “system alarms” that can be displayed at this point. They are listed in the “Current System Alarms” table on page 15. The current system alarms will be displayed in plain text to describe the actual problem. If there is more than one current problem the keypad will display event alarm sequentially with the heading of “CURRENT ALARMS” on the top line and the alarm on the bottom line.
Each time the “MEMORYÇ” button is pressed, the next alarm will be displayed.
If there are no system problems with the panel the display will show “NO FAULTS”.
When all current system alarms have been displayed the keypad will then start to show the historical memory events.

HISTORICAL MEMORY EVENTS

Following the “Current System Alarms” the panel will display the historical memory events. The panel stores the most recent events, (up to 255), including all alarm events, all system events such as mains failure etc as well as arm/ disarm by User & Area. The memory events are displayed via the LCD keypad with the most recent event shown first and subsequent events following in descending order from newest to oldest.

During the “Historical Memory Event” display mode the LCD display will show the type of event on the top line eg “Area A armed by User 1” and the actual time and date that the event occurred on the bottom line.
To view events simply press the “MEMORYÇ” button. The keypad will beep and the display is advanced to the next event every time the “MEMORYÇ” button is pressed.
If you wish to go back and look at an earlier event you can use the “È” or “STAYÈ” buttons to go back to an earlier event. Each time the Down arrow is pressed the memory will go back one event.
When all events in memory have been displayed the keypad will exit memory mode and return to the normal idle state. To cancel the memory display just press “ENTER”.

If the “ENTER” button is not pressed and the display mode is not advanced to the last memory event, the keypad will automatically exit memory display mode after approximately 20 seconds.

When there is a new event in memory the words “ NEW MEM EVENT” will be shown on the LCD display.
The “ NEW MEM EVENT” display will be reset once the event has been viewed or the panel is armed.

LED KEYPAD INSTALLATION

INSTALLATION

Separate the two keypad halves of the **Arrowhead Keypad** by carefully inserting a small screwdriver into the release slots on the bottom edge of the keypad front half and applying a gentle pressure. This will release the bottom edge of the housing enough for you to unclip the top.

To separate the two keypad halves of the **Crow Slim-line LED Keypad**, unscrew the fastening screw at the bottom of the keypad.

Screw the base to the wall using the mounting holes provided. These holes will match the standard single switch plate spacing. Ensure the base is mounted right side up. It is marked with the word "TOP", on the Arrowhead keypad base, or the screw should be at the bottom on the Crow keypad base. When fixing the base to the wall make sure the top of the screw heads will not touch or short out the underside of the PCB when the top half of the keypad is reinstalled. Bring the cables through the centre of the base.

Connect the 4 wires to the 5 way terminal block on the rear of the keypad PCB making sure to match the cables up with the terminals as marked on the control panel's keypad port. The 5th wire is an optional “Listen-in“ connection. It is connected from the "LIN" terminal of the keypad to the "Lin" terminal of the panel keypad port. With the Listen-in wire connected the user can hear the call progress during dialling at the keypad (provided the desired program options at address P175E 6E are turned on).

Once the cables have been terminated and the required address allocated (see section below) fit the front half of the keypad onto the base.

The maximum recommended cable distance using standard 0.2mm security cable is 50m. Cable runs exceeding this distance may require 0.5mm cable. Always use good quality cable. Some installations may require CAT5 data cable to ensure data integrity in noisy sites.

LED KEYPAD ADDRESS ASSIGNMENT

A total of 8 devices (keypads or proximity readers) can be connected to the panel. Each keypad must be addressed individually to avoid BUS
conflicts when multiple users are operating different keypads simultaneously. By default, each keypad comes addressed as KP # 1.
Setting the LED keypad address is done in “Local Program Mode”.

To enter **“Local Program Mode”** on the LED Keypad you must press and hold the **<CONTROL>** button down and within 2 seconds, press the **<BYPASS>** button.

The “PROGRAM” LED will turn on plus the current keypad address will be displayed on the zone LED’s.
The default setting is address 1 so zone LED 1 will also be on.

To change the keypad address so that it is different to others connected to the panel press a number on the keypad from 1-8 relating to the address you wish to assign to the keypad, e.g. if the keypad is the second one connected to the panel and the other keypad is set to address 1, press 2 to select keypad address 2 for this keypad. The selected address will be displayed on the zone LED’s (in this example LED 2 would be on).

To Exit “Local Program Mode” press the **<ENTER>** Button.

The “PROGRAM” LED will turn off and the display will return to normal with the mains & battery LED’s on.

If you do not assign a unique address to every keypad and reader connected to the keypad buss, a conflict will exist that will cause erratic operation. Each reader or keypad MUST have a different address.

LED KEYPAD TAMPER SWITCH

Some LED keypads may have a tamper switch fitted. If the switch is fitted, the tamper monitoring is inhibited until the tamper switch is closed for the first time. After that if the switch is opened a keypad tamper alarm will be generated. If the keypad has provision for a tamper switch but the switch is not fitted, the keypad tamper alarm will be permanently inhibited because it can never be closed to start the tamper monitoring.

LCD KEYPAD INSTALLATION

INSTALLATION

Separate the two keypad halves of the **Arrowhead LCD Keypad** by carefully inserting a small screwdriver into the release slots on the bottom edge of the keypad front half and applying a gentle pressure. This will release the bottom edge of the housing enough for you to unclip the top.
To separate the two keypad halves of the **Crow LCD Keypads**, unscrew the fastening screw at the bottom of the keypad.
Screw the base to the wall using the mounting holes provided. These holes will match the standard single switch plate spacing. Ensure the base is mounted right side up. It is marked with the word "TOP", on the Arrowhead keypad base, or the screw should be at the bottom on the Crow keypad base. When fixing the base to the wall make sure the top of the screw heads will not touch or short out the underside of the PCB when the top half of the keypad is reinstalled. Bring the cables through the centre of the base.

Connect the 4 wires to the 5 way terminal block on the rear of the keypad PCB making sure to match the cables up with the terminals as marked on the control panel's keypad port. The 5th wire is an optional “Listen-in“ connection. It is connected from the "LIN" terminal of the keypad to the "Lin" terminal of the panel keypad port. With the Listen-in wire connected the user to hear the call progress during dialling at the keypad (provided the desired program options at address P175E 6E are turned on).

Once the cables have been terminated clip the front half of the keypad onto the base.

The maximum recommended cable distance using standard 0.2mm security cable is 50m. Cable runs exceeding this distance may require 0.5mm cable. Always use good quality cable. Some installations may require CAT5 data cable to ensure data integrity in noisy sites.

LCD KEYPAD ADDRESS ASSIGNMENT

A total of 8 devices (keypads or proximity readers) can be connected to the panel. Each keypad must be addressed individually to avoid BUS conflicts when multiple users are operating different keypads simultaneously. By default, each keypad comes addressed as KP # 1.
Setting the LCD keypad address is done in “Local Program Mode”.

There are two types of LCD keypad that can be connected to the panel, the Arrowhead or the Crow LCD keypad.
Accessing “Local Program Mode” is different for each keypad.

To enter **“Local Program Mode”** on the Arrowhead LCD Keypad you must press and hold the <CONTROL> button down and within 2 seconds, press the <BYPASS> button.

To enter **“Local Program Mode”** on the Crow LCD Keypad you must press and hold the <CONTROL> button down and within 2 seconds, press the <ARM> button.

When in Local Program Mode the display will show **local mode kb 1** with the number 1 meaning the keypad address is currently 1.

To change the keypad address to be different to others connected on the panel press;

<PROGRAM> 996 <ENTER>

The display will now show;

Keypad number
1

Select an unused address, eg “2” then press <ENTER> to save.

To exit “Local Program Mode” press and hold the **<PROGRAM>** Button for two seconds.
You can select the program location directly as shown above or there is also a menu function to navigate the various options in “Local Edit Mode” that is described in detail on page 21.

If you do not assign a unique address to every keypad and reader connected to the keypad buss, a conflict will exist that will cause erratic operation. Each reader or keypad MUST have a different address.

ADJUSTING THE LCD KEYPAD BACKLIGHTING

The user can independently adjust the backlight level of the LCD display and the Keypad Buttons from off to on with 16 steps in between. The Buttons used for these special functions vary depending on the LCD keypad. There are two types of LCD keypad that can be used, the “AAP” keypad and the “Crow” keypad. The Crow keypad can be identified by the extra buttons “A”, “B” & “CHIME”.

To **increase the AAP LCD backlight** level Press “CONTROL” followed within 2 seconds by “ARM”. By holding down the “Control” button and repeatedly pressing the “ARM (Left Arrow)” button you can increase the LCD backlight level to the maximum.
To **reduce the AAP LCD backlight** level Press “CONTROL” followed within 2 seconds by “PANIC”. By holding down the “Control” button and repeatedly pressing the “PANIC (Right Arrow)” button you can decrease the LCD backlight level until it is off.

To **increase the AAP Keypad Button backlight** level Press “CONTROL” followed within 2 seconds by MEMORY”. By holding down the “CONTROL” button and repeatedly pressing the “MEMORY (Up Arrow)” button you can increase the Keypad LED backlight level to the maximum.
To **reduce the AAP Keypad Button backlight** level Press “CONTROL” followed within 2 seconds by “STAY”. By holding down the “CONTROL” button and repeatedly pressing the “STAY (Down Arrow)” button you can decrease the Keypad LED backlight level until it is off.

To **increase the Crow LCD backlight** level Press “CONTROL” followed within 2 seconds by “STAY”. By holding down the “Control” button and repeatedly pressing the “STAY (Left Arrow)” button you can increase the LCD backlight level to the maximum.
To **reduce the Crow LCD backlight** level Press “CONTROL” followed within 2 seconds by “BYPASS”. By holding down the “Control” button and repeatedly pressing the “BYPASS (Right Arrow)” button you can decrease the LCD backlight level until it is off.

To **increase the Crow Keypad Button backlight** level Press “CONTROL” followed within 2 seconds by “MEMÇ”. By holding down the “CONTROL” button and repeatedly pressing the “MEMÇ (Up Arrow)” button you can increase the Keypad LED backlight level to the maximum.
To **reduce the Crow Keypad Button backlight** level Press “CONTROL” followed within 2 seconds by “È”. By holding down the “CONTROL” button and repeatedly pressing the “È (Down Arrow)” button you can decrease the Keypad LED backlight level until it is off.

ADJUSTING THE KEYPAD BUZZER TONE

The user can adjust the frequency (tone) of the LCD keypad buzzer within a range of 16 steps. By adjusting the frequency the volume of the tone produced at the buzzer varies as well.

To **increase the frequency of the AAP LCD buzzer** Press “CONTROL” followed within 2 seconds by “1”. By holding down the “CONTROL” button and repeatedly pressing the “1” button you can increase the frequency of the buzzer tone.
To **decrease the frequency of the AAP LCD buzzer** Press “CONTROL” followed within 2 seconds by “2”. By holding down the “CONTROL” button and repeatedly pressing the “2” button you can decrease the frequency of the buzzer tone.

To **increase the frequency of the CROW LCD buzzer** Press “CONTROL” followed within 2 seconds by “A”. By holding down the “CONTROL” button and repeatedly pressing the “A” button you can increase the frequency of the buzzer tone.
To **decrease the frequency of the CROW LCD buzzer** Press “CONTROL” followed within 2 seconds by “B”. By holding down the “CONTROL” button and repeatedly pressing the “B” button you can decrease the frequency of the buzzer tone.

LCD KEYPAD "LOCAL EDIT" PROGRAM MODE

The Local Edit Program Mode allows the programming of a customised "System Name" (the name displayed during idle mode at the keypad), Customised "Zone Names" (the text that appears on the keypad when a zone is unsealed), Customised "User Names" (the User name will appear when viewing arm/disarm events in memory mode), Customised "Area Names" (the Area name will appear when viewing arm/disarm events in memory mode) and Customised "Output Names" (the Output name will appear when viewing Output On/Off events in memory mode).

ACCESSING LOCAL EDIT MODE

To enter Local Edit Program Mode on an AAP LCD Keypad Press **"CONTROL"** followed by **"BYPASS"** and hold for 2 seconds.
To enter Local Edit Program Mode on a CROW LCD Keypad Press **"CONTROL"** followed by **"ARM"** and hold for 2 seconds.
NOTE: You must press the "Control" button first and the "Bypass" or "Arm" button must be pressed within 2 seconds of pressing the Control button. If you make a mistake press the "Enter" button then repeat the process.

The display will now show **"Local Mode kb #"** where the # equals the keypad address as previously set (see "LCD keypad address assignment" on page 19 for details). There are two ways to program the keypad in "Local Edit Mode". You can enter in the program location directly from the list below or you can use the menu function to navigate through all of the program options. The menus are described on the following pages.

LOCAL EDIT MODE DIRECT PROGRAM ADDRESSES

There are a number of program addresses available to you at this point. They are;

[PROG]-[1]-[ENTER] to;	ZONE#1 TEXT (maximum 16 characters)
[PROG]-[16]-[ENTER]	ZONE#16 TEXT
[PROG]-[800]-[ENTER]	UPDATE EDITABLE TEXT TO ALL LCD KEYPADS
[PROG]-[801]-[ENTER]	RETURN ALL EDITABLE TEXT TO DEFAULT
[PROG]-[995]-[ENTER]	PANEL TYPE
[PROG]-[996]-[ENTER]	SET KEYPAD ADDRESS NUMBER FROM 1-8
[PROG]-[997]-[ENTER]	KEYPAD LANGUAGE
[PROG]-[998]-[ENTER]	AREA IDENTIFYING CHARACTER (assigning numbers or letters to Areas)
[PROG]-[999]-[ENTER]	PANEL NAME DISPLAY (maximum 16 characters)
PROG]-[1001]-[ENTER] to;	PROGRAM USER "1" NAME
PROG]-[1100]-[ENTER]	PROGRAM USER "100" NAME
[PROG]-[2001]-[ENTER]	AREA "A" IDENTIFYING NAME (maximum 16 character Area name)
[PROG]-[2002]-[ENTER]	AREA "B" IDENTIFYING NAME (maximum 16 character Area name)
PROG]-[3001]-[ENTER] to;	PROGRAM OUTPUT "1" NAME
PROG]-[3008]-[ENTER]	PROGRAM OUTPUT "8" NAME

KEYPAD TAMPER SWITCH

Some LCD keypads may have a tamper switch fitted. If the switch is fitted, the tamper monitoring is inhibited until the tamper switch is closed for the first time. After that if the switch is opened a keypad tamper alarm will be generated. If the keypad has provision for a tamper switch but the switch is not fitted, the keypad tamper alarm will be permanently inhibited because it can never be closed to start the tamper monitoring.

LCD KEYPAD “LOCAL EDIT” MODE MENU PROGRAMMING

The LCD Keypad Main menu headings for “Local Edit” program mode are listed on this page. On entering Local Edit Mode the display will look like the example below.

```
LOCAL MODE KB 1
USER NAMES
```

To move to the next menu heading simply press the Çarrow. To move back to the previous heading simply press the È Arrow.

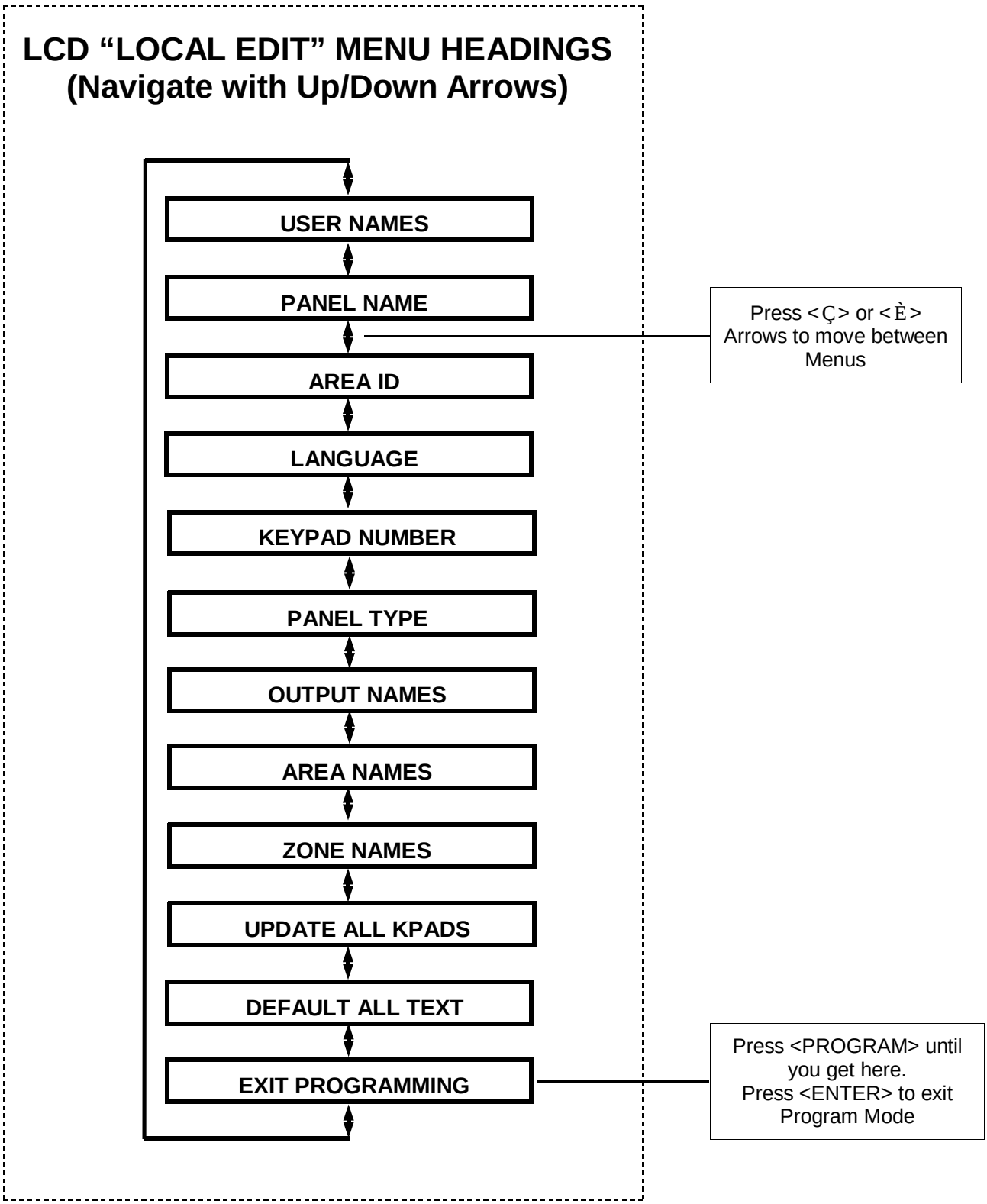

When you are at the desired main menu heading, press <ENTER> to access the data program location. See example below.

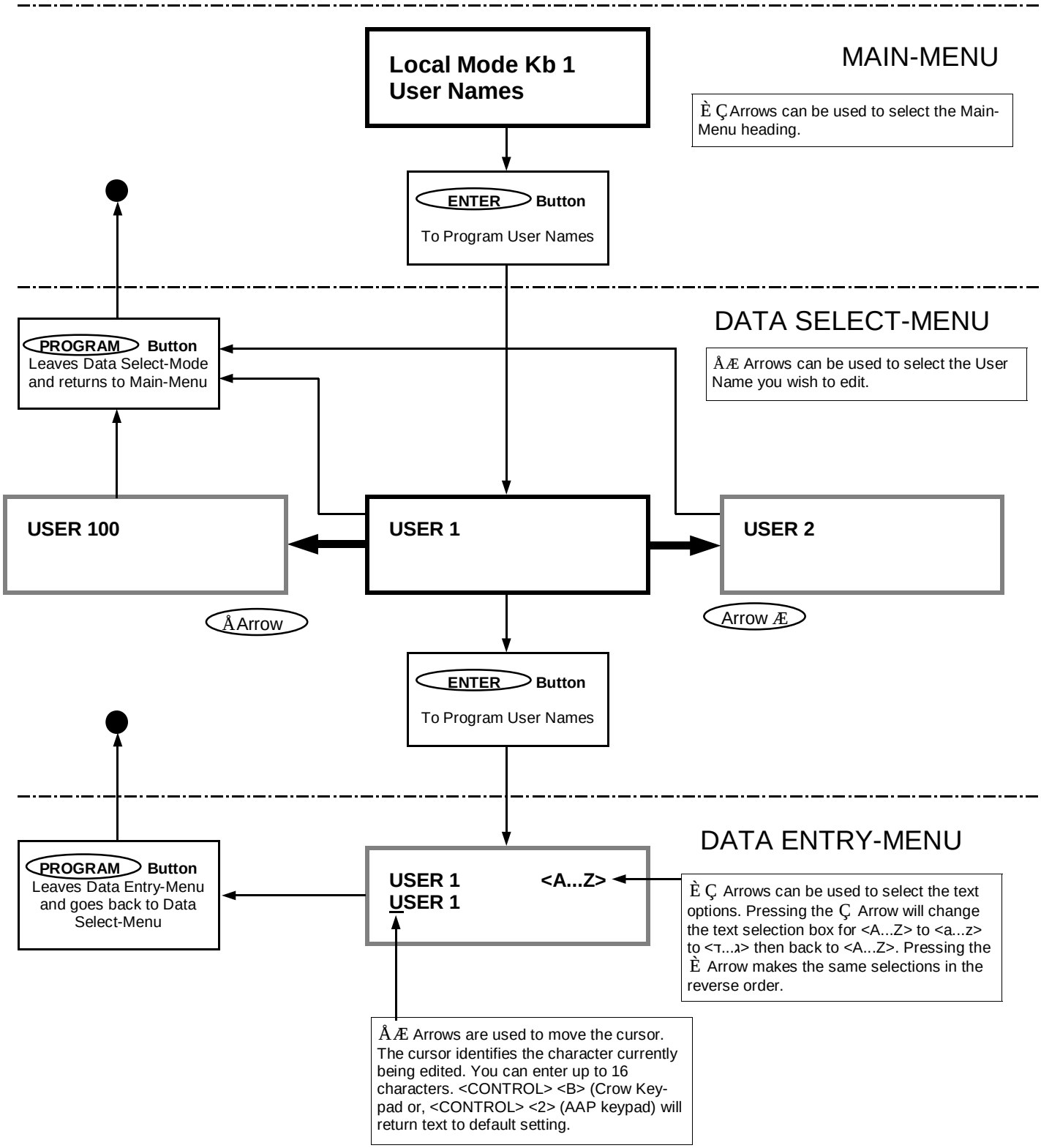

CHANGING THE AREA SINGLE CHARACTER IDENTIFIER

```
Areas          <A..Z>
ABCDEFGHIJKLMNOP
```

When you enter in **[PROG]-[998]-[ENTER]** the display will look like the example above. You may edit the single character Area identifier at this address starting at Area “A” (first left-hand position). The keypad allows for up to 16 areas but the actual number of areas supported on this panel is two. The first character (in this case the ”A”) is the identifier used to show the status of the first Area when armed. The second position (in this case the “B”) is the identifier used to show the status of the second Area.
If you preferred to have the first area shown as Area “1” and not “A” then you can change it here using the same method as used previously. With the cursor underneath the letter “A”, Press the “1” button four times until the character in the first slot shows “1”.
When you are happy with the changes Press the “ENTER” button to save the changes.

CHANGING THE ZONE NAMES

When in “Local Edit Program Mode” and you have entered [PROG]-[1]-[ENTER], the display will look like this;

```
Zone 1         <A..Z>
Zone 1
```

The Cursor will be underneath the first letter to be edited (in this case the “Z”).
The letters **<A..Z>** indicate that the letters selected by the numeric buttons (0-9) will be in capitals.
By pressing the “MEMORY (AAP)” or “MEMÇ (CROW)” button once, the display will change to **<a..z>** indicating that the letters selected by the numeric buttons (0-9) will be lower case.
By pressing the “MEMORY (AAP)” or “MEMÇ (CROW)” button again, the display will change to <**ד..ת**> indicating that Hebrew characters can be selected by the numeric buttons (0-9).
You can cycle back to another selection by pressing the “STAY (AAP)” or “È (CROW)” button.
Once you have selected the desired font you can now proceed to change the text for Zone 1.

The following table shows the English Characters that can be selected by each numeric button.
The lower case options are shown in ( ).

▼Button #	1st Press	2nd Press	3rd Press	4th Press
1	* (‘)	# (<)	= (>)	1
2	A (a)	B (b)	C (c)	2
3	D (d)	E (e)	F (f)	3
4	G (g)	H (h)	I (i)	4
5	J (j)	K (k)	L (l)	5
6	M (m)	N (n)	O (o)	6
7	P (p)	Q (q)	R (r)	7
8	S (s)	T (t)	U (u)	8
9	V (v)	W (w)	X (x)	9
0	Blank	Y (y)	Z (z)	0

There are four different selections per button. By pressing the button once, a character will appear in the display (see “1st press” column below) . Pressing the same button again will cause the display to change to the next character in the sequence (see “2nd press” column). After you have pressed the same button four times the next press (5th) will cause the display to wrap back to the beginning.
Once you have selected the first character, Press the “PANICÆ (AAP)” or “BYPASSÆ (CROW)” button to move the cursor one position to the right.
Now select the second character and move the cursor to the right repeating the process until all of the text is completed (Remember that there are a maximum of 16 characters per program address).
If you make a mistake use the “ÅARM (AAP)” or “STAYÅ (CROW)” button to move the cursor towards the left and make any corrections.
When you are happy with the text Press “ENTER” to save the changes. You can program the text for all zones in the same way.

CHANGING THE KEYPAD AREA NAME

```
AREA A          <A..Z>
Area A
```

When you enter **[PROG]-[2001]-[ENTER]** the display will look like the example above. You may edit the Area Name at this location. The area name can be up to 16 characters long. If you program in a name for the area, this name will appear when displaying events in memory display mode.
When you are happy with the changes Press the “ENTER” button to save the changes.

CHANGING THE KEYPAD NAME

```
Name            <A..Z>
        ELITE S
```

When you enter **[PROG]-[999]-[ENTER]** the display will look like the example above. You may enter any name you wish up to 16 characters in length (using the same method as described for zone names). This name is displayed at the keypad in Idle mode.
When you are happy with the changes Press “ENTER” to save.

CHANGING THE USER NAMES

When in “Local Edit Program Mode” and you have entered [PROG]-[1001]-[ENTER], the display will look like this;

```
User 1          <A..Z>
User 1
```

You can now enter in the persons name (maximum of 16 characters). When viewing events in “Memory” mode, the User name will appear to identify who the user was that Armed/Disarmed the system.
When you are happy with the changes Press “ENTER” to save.

CHANGING THE OUTPUT NAMES

When in “Local Edit Program Mode” and you have entered [PROG]-[3001]-[ENTER], the display will look like this;

```
Output 1        <A..Z>
Output 1
```

You can now enter an Output name (maximum of 16 characters). When viewing events in “Memory” mode, the Output name will appear to identify what function the Output is controlling.
When you are happy with the changes Press “ENTER” to save.

RESETTING INDIVIDUAL TEXT TO DEFAULT or LAST SAVED SETTING

*While in “Local Edit Mode” there are two special functions that can be performed at any of the “Local Edit” Program locations. They are **“Return to Default Text”** or “**Return to Previously Saved Text”.***

For Example, to *Return the Zone 1 text back to Defaults*;

If during the programming of Zone 1 text [PROG]-[1]-[ENTER] you wished to return back to the default text, simply Press and hold the **“CONTROL”** button followed within 2 seconds by **“2”** if using an AAP Keypad. If using a Crow Keypad press and hold the **“B”** button for 2 seconds, and the text will return to the default settings.

If you wished to return to the last saved version of the text simply Press and hold the **“CONTROL”** button followed within 2 seconds by **“1”** if using an AAP Keypad. If using a Crow Keypad press and hold the **“A”** button for 2 seconds and the last saved text for zone one will appear.
NOTE: If the last saved version of text for Zone 1 was in fact the default setting, then pressing “Control” then “1” or “A” will return the default text anyway.

RESETTING ALL TEXT TO DEFAULT

While in "Local Edit Mode" it is possible to restore all of the customisable text fields to the factory default settings.

When you enter in **[PROG]-[801]-[ENTER]** display will prompt you to press **[801]-[ENTER]** again. Once you have pressed "801 enter", all customisable text (eg zone names, user names, output names, etc) will be returned to the default text.

COPYING TEXT TO ANOTHER LCD KEYPAD

If more than one LCD keypad is connected to the panel, it is possible to copy the edited Text from one LCD keypad to all other LCD keypads connected to the same panel.
When you enter in **[PROG]-[800]-[ENTER],** all of the customisable text at the keypad will be transferred to all other LCD keypads connected to the control panel.
To maintain compatibility with earlier LCD keypads there is also an alternative method to transfer the text. If using an AAP Keypad, while in "Local Edit Mode" at the keypad with the edited text press **"Control**" followed within 2 seconds by **"3"**. If using a Crow Keypad pressing the **"CHIME"** button for 2 seconds while in "Local Edit Mode" will perform the transfer. The text in your keypad will be transferred to all other LCD keypads connected to the panel.

EXITING LOCAL EDIT PROGRAM MODE

Press and hold the <PROGRAM> button for 2 seconds and the LCD keypad will leave Local Edit Mode and return to Idle Mode or;

Press the <PROGRAM> button repeatedly until the display reads "Exit Programming", then press the <ENTER> button to exit program mode.

ACCESSING PROGRAM MODE

HOW TO PROGRAM USING LED KEYPADS

The programming sequence follows this pattern;

<**PROGRAM**> - <1,2 or 3 digit address> - <**ENTER**> *(Program Address)*
1 short beep if OK - 1 long beep if error, THEN

<**PROGRAM**> - <1,2 or 3 digit sub-address> - <**ENTER**> *(Sub-Address)*
3 short beeps if OK - 1 long beep if error

The LED's will display current value or status
Enter the new value or option
<New Value> - <**ENTER**>
3 short beeps if OK - 1 long beep if error

Throughout this manual you will see program instructions expressed as
P 1 E 1-100 E

Using the above example the <P> represents the **PROGRAM** key and <E> represents the **ENTER** key.
<1> refers to the address for programming User Codes and <1-100> refers to Users 1-100.

ACCESS TO PROGRAMMING ON POWER UP (INSTALLER MODE)

When power is applied to the controller for the first time and with the panel tamper input open, the panel will inhibit tamper alarms and ready the panel to enter **INSTALLER PROGRAM MODE** (unless the Installer Lock-out at address P25E10E Option 8 has previously been enabled). At this point you can go to any keypad which is connected to the panel and press **<PROGRAM> <ENTER>** which will automatically put that keypad into full Program mode. The Program LED will now be Flashing (NOTE: Only one keypad can be in Program mode at any time).

ACCESS TO INSTALLER PROGRAM MODE FROM RUN MODE

Before you can enter Installer program mode from normal operating mode, the panel must not be Armed or in Stay mode. Program mode access is inhibited if any part of the system is Armed.

Press <**PROGRAM**> - <**Installer Code**> - <**ENTER**>
Program light will Flash
Note: Default Installer Code (P25E1E) is 000000.

You are now in Installer Program Mode. Any program addresses may be viewed or changed in this mode.

ACCESS TO CLIENT PROGRAM MODE FROM RUN MODE

Press <**PROGRAM**> - <**Master User Code**> - <**ENTER**>
Program light On Steady
Note: Default Master User Code is code # 1 (P1E1E) which is 1234.

You are now in Client Program Mode. Access to certain program locations is limited while in Client mode (see the options at address P5E). Each User can have different privileges based on the options assigned to the User at address P5E. If no options are set at address P5E for a user, they will not be allowed access to Client program Mode.

RESETTING BACK TO FACTORY DEFAULT SETTINGS (From Install Mode Only)

There are two addresses that allow you to reset the panel back to the factory defaults. The first resets just User Codes, Installer Code & Telephone Numbers. The Second resets all programming back to the factory Defaults.

e.g. To reset All System defaults:

Press <**PROGRAM**> - <**P200E10E**> - <**ENTER**>
3 short beeps if OK - 1 long beep if error

After the system configuration has been reset back to defaults, all values, options & Codes will be set to the values shown in the Program Summary as defaults. These values have been chosen as the most common set-up for the majority of systems.

To reset partial defaults:

Press <**PROGRAM**> - <**P200E9E**> - <**ENTER**>
3 short beeps if OK - 1 long beep if error

The partial reset to defaults will return all User Codes, the Installer Code and Telephone Numbers back to the values shown in the Program Summary as defaults. These values have been chosen as the most common set-up for the majority of systems.

TO EXIT PROGRAM MODES USING LED KEYPAD

To exit either program mode when you have finished programming:

Press <**PROGRAM**> - <**ENTER**>
Program light goes out

The panel is now back in Run Mode, any program changes you have made will have replaced previous values and be in effect.

Note: During programming Tampers and 24 hour alarms are disabled which allows quiet access to the panel, detectors and external siren units, etc. On exiting program mode, all inputs are scanned and if any tampers or 24Hr alarms are present an activation will occur.

TO EXIT PROGRAM MODES USING LCD KEYPAD

There are two ways to exit Program Mode with an LCD keypad. To exit either program mode when you have finished programming:

Repeatedly press the <**PROGRAM**> button until the display shows
"<ENTER> TO EXIT"
Now press <ENTER> to exit Program Mode.,
OR

Press and hold the <PROGRAM> button for 2 seconds to exit program mode

The panel is now back in Run Mode, any program changes you have made will have replaced previous values and be in effect.
Note: During programming Tampers and 24 hour alarms are disabled which allows quiet access to the panel, detectors and external siren units, etc. On exiting program mode, all inputs are scanned and if any tampers or 24Hr alarms are present an activation will occur.

HOW TO PROGRAM USING LCD KEYPADS

Access to Program Mode when using an LCD Keypad is exactly the same as when using an LED Keypad (see previous page for access to program mode from power-up and normal run mode).
Once in Program Mode (either Client Mode or Installer Mode), the User can still enter program addresses directly at the keypad to go straight to a particular address, as with the LED Keypad.

But the LCD Keypad also incorporates built-in menus that allow the Programmer to move through the Main-Menus using the Up/Down Arrow keys. Also when at a data entry location, the Left/Right Arrows can be used. These special Function Arrow keys are clearly marked on the keypad buttons (the position of the buttons can vary depending on the type of LCD Keypad installed).

When navigating the Menus using the Arrow keys, each button has a special function depending on where you are within the menus.

When you enter program mode the LCD Keypad display automatically defaults to "CLIENT:USER" (if in Client mode) or "INSTALLER:USER" (if in Installer mode). By using the UP or DOWN Arrows, the user can cycle through all of the available menus.

The menus are accessed in a particular order based on the most frequently used program locations. All of the Main and the Sub-Menus are shown on the following pages.

LCD KEYPAD MENU PROGRAMMING

The LCD Keypad enables “Manual Free’ programming of the ELITE S panel. Easy to follow plain text Menus will be displayed on the keypad to enable selection of the desired programming options.

ENTER <ENTER> key selects the Menu you wish to work in or the option in a Sub-Menu you wish to use.

PROGRAM <PROGRAM> key will step you back to the previous Menu level.

Ç È <Up> or <Down> arrow keys will allow you to cycle through the Menu options (Main & Sub Menus).

ÅÆ <Left> or <Right> arrow keys can be used when in the Data Entry-Menus to cycle through the options (eg if in “USERS” Data Entry-Menu, the options would be Users 1-100, if in “ZONES” the options would Zones 1-16, etc)

SELECTING THE MAIN-MENU HEADINGS (“Ç Up” or “È Down” Arrow Keys)

Enter “INSTALLER” Program Mode eg <PROGRAM> - <INSTALLER CODE (000000)> - <ENTER>.

The LCD will display “INSTALLER:USERS”. This is the default Main-Menu heading.

To access a desired program location you first navigate to the desired Main-Menu by using the “Ç Up” or “È Down” arrow keys on the keypad. Each press of “Ç Up” or “È Down” arrow keys will advance the display to the next Menu heading.
The Main-Menu headings are shown on the top line of the LCD display.
To access the Sub-Menu options from a Main-Menu press the <ENTER> button.

SELECTING THE SUB-MENU HEADINGS (“Ç Up” or “È Down” Arrow Keys)

Having pressed the <ENTER> button at the selected Main-Menu heading the keypad will now show Sub-Menus for that heading.
The Main-Menu heading will remain on the top line of the LCD display and the Sub-Menus will appear on the bottom line.
Each press of “Ç Up” or “È Down” arrow keys will advance the Sub-Menus displayed on the bottom line either up or down by one location..

To access the Data Entry-Menu options from the Sub-Menu press the <ENTER> button.

SELECTING THE DATA ENTRY-MENU HEADINGS

Having pressed the <ENTER> button at the desired Sub-Menu heading, the keypad will now be in the Data Entry-Mode.

The Main-Menu heading on the top line of the display will be replaced with the actual data entry field description, eg if you had gone from “USERS” to “CODES” then to the data entry field of codes the display will show “USER CODE 1” on the top line of the display and the code “1234” on the bottom line (“1234” being the default User 1 code). See the chart on page 21 for details.

You can now change the code, eg to change Code # 1 to 4567 press <4567> <ENTER>. The bottom line will now show the new code of “4567”.

At this point you can use the “Ç Up” or “È Down” arrow keys to cycle through the other Sub-Menu options for User Code 1 to program all of the options for code 1, or;

You can use the “Å Left” or “Æ Right” arrow keys to cycle through all of the User codes. This allows you to program all of the user codes from 1-100. The “Æ Right” arrow key when pressed will take you up one User at a time and the “Å Left” arrow key will take you down one User, eg if the display was currently showing “USER CODE 10”, pressing the “Å Left” arrow key will take the display to “USER CODE 9”, pressing the “Æ Right” arrow key will take the display to “USER CODE 11”.
You can also use the “Å Left” or “Æ Right” arrow keys to move through all of the User codes, and while at a particular User, you can also use the “Ç Up” or “È Down” arrow keys to program all options for that User.

If you are at a location that has 8 programmable options, eg P4E where the User Arm/Disarm options can be set, by pressing and holding the <CONTROL> button then within 2 seconds pressing the <ENTER> button you can access the sub- text that describes what each option can do. To exit the sub-text display press <ENTER>.

STEPPING BACK THROUGH THE MENUS

If you are in a Menu location, eg the “USER” Data Entry field, and you wish to step back one stage to the previous Sub-Menu, you need to press the <PROGRAM> button.

Each time the <PROGRAM> button is pressed the display will step back to the previous stage (remembering where you were before) until you get back to the Main-Menu.
For example if you were in the “KEYPADS” Main-Menu, then pressed <ENTER> to get to the “AREAS” Sub-Menu for keypads, then pressed <ENTER> again to get to the “AREAS” Data Entry-Menu for keypads, you could now press the <PROGRAM> button once and it would take you back to the “KEYPADS/AREAS” Sub-Menu. Pressing <PROGRAM> again will take you back to the “KEYPADS” Main-Menu, and pressing <PROGRAM> one more time will return you back to the default “USERS” Main-Menu.

If you get back to the “USERS” menu and press the <PROGRAM> button once more the display will go to the program exit menu. If you press <ENTER> when at this point the panel will leave program mode. If you don’t wish to leave program mode you can press the <PROGRAM> button again to return to the “USERS” menu.

<u>The flowchart below indicates the program menu steps using the “ARROW” , “ENTER” & “PROGRAM” Buttons on the keypad.</u>

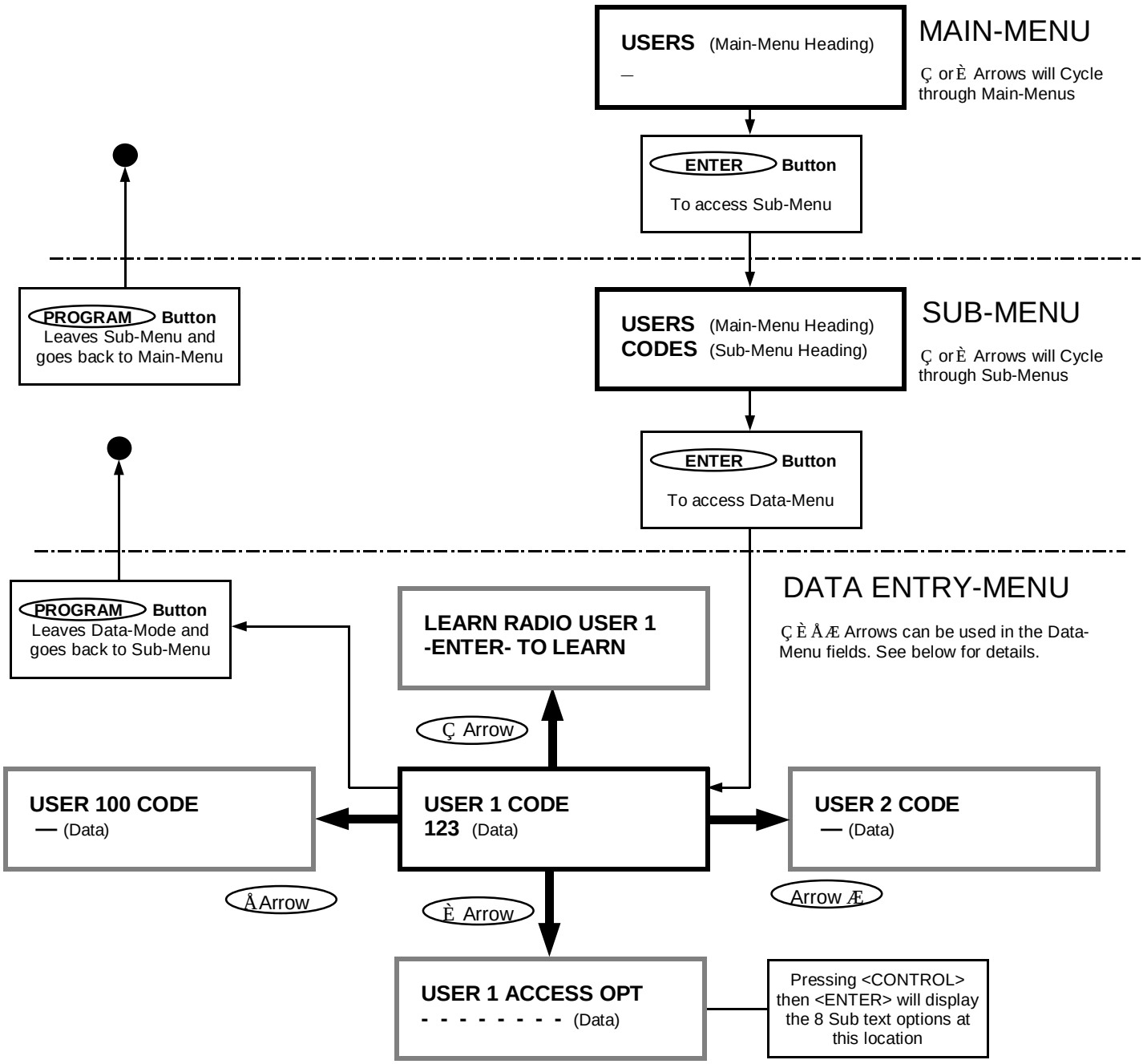

LCD KEYPAD PROGRAM MENU FLOWCHART

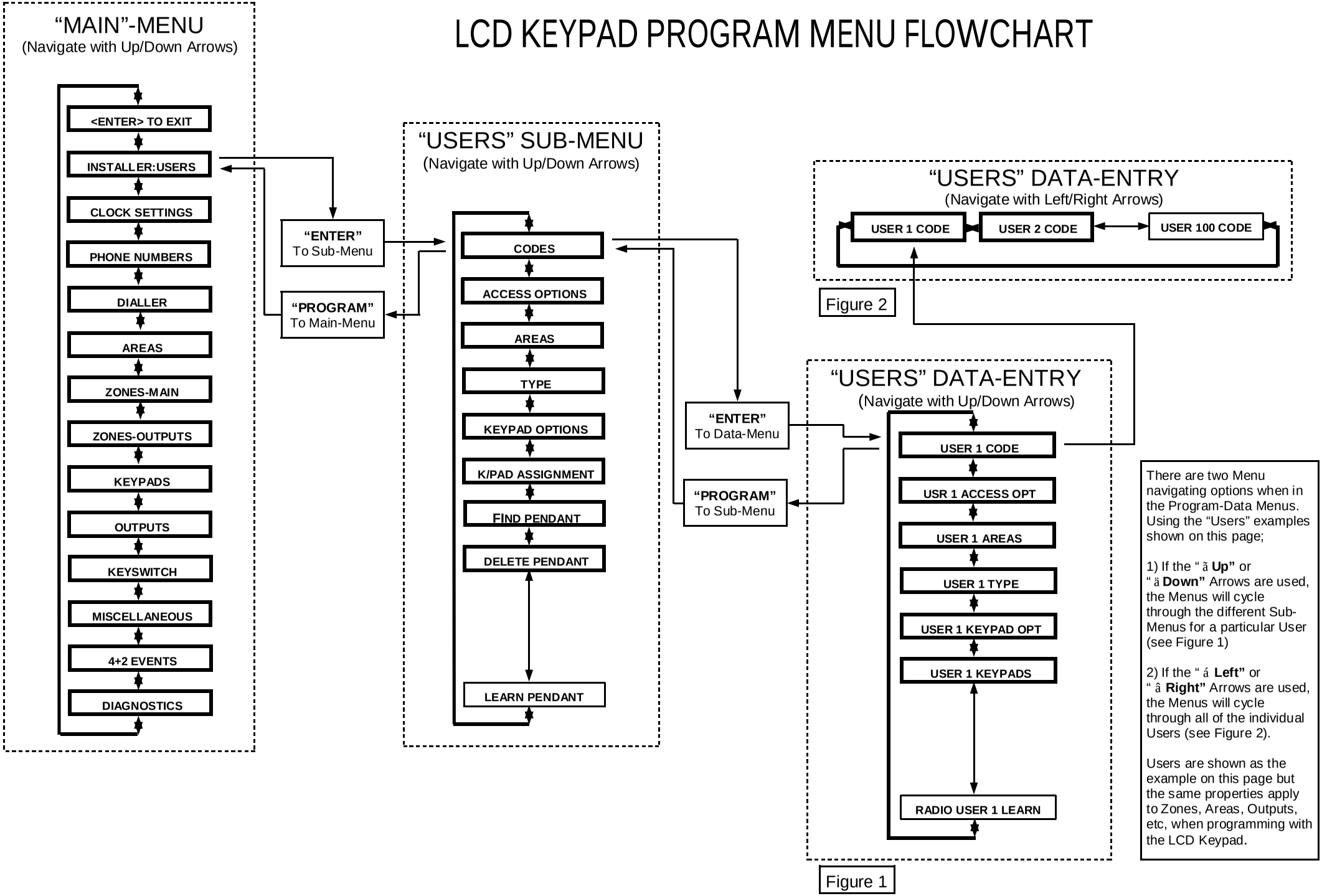

LCD “MAIN” MENU HEADINGS

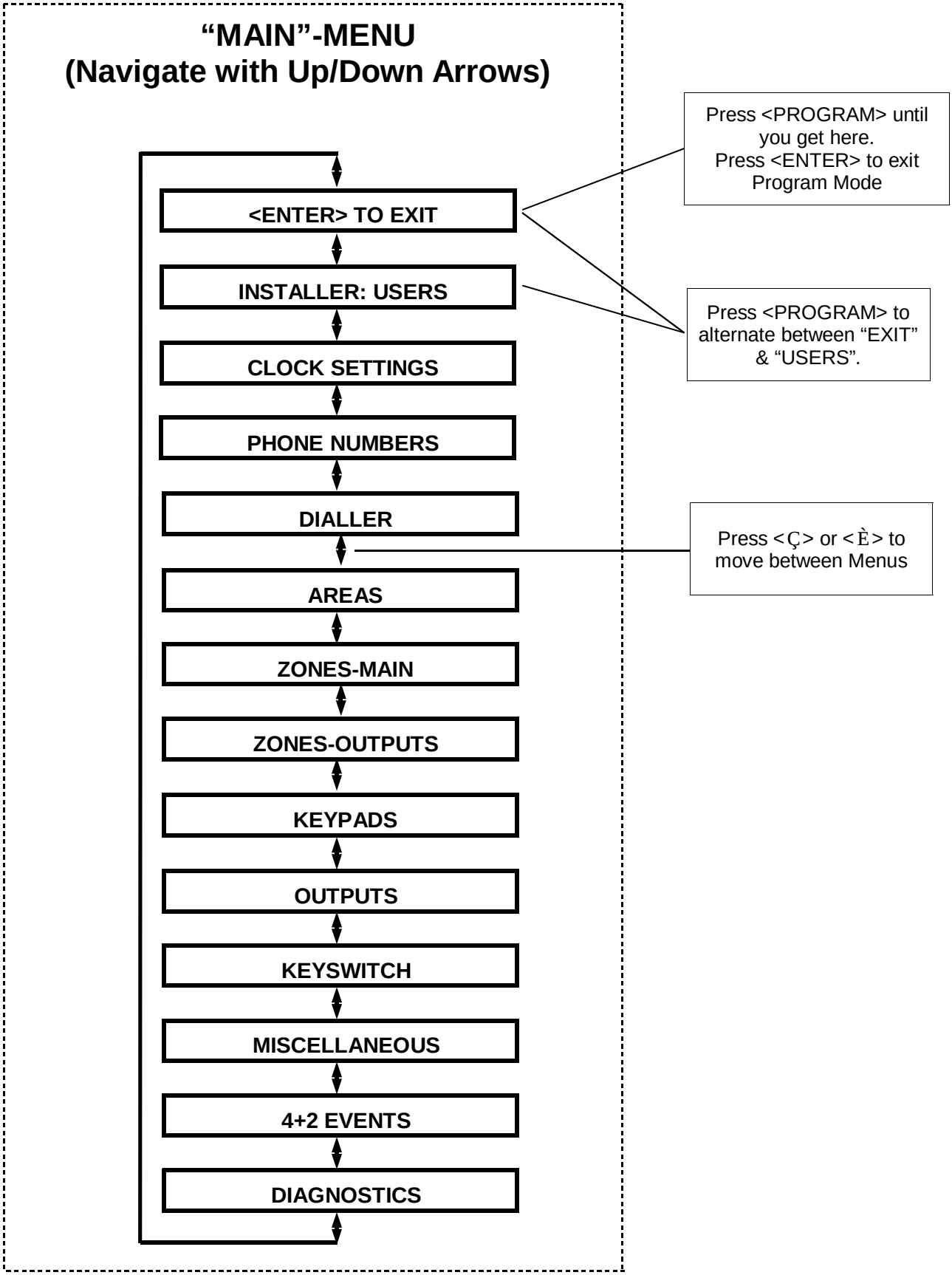

LCD KEYPAD MAIN & SUB MENU PROGRAM CHART

INSTALLER:USERS

USERS **USER CODE** P1E	USERS **USER TYPE** P2E	USERS **USER AREAS** P3E	USERS **USR ACCESS OPTS** P4E	USERS **USR PROG OPTS** P5E	USERS **PENDANT TYPE** P7E
USERS **PENDANT OPTS** P8E	USERS **USR TIME ZONES** P9E	USERS **USR DEVICES** P10E	USERS **RADIO PANIC BP** P11E	USERS **USR OUTPUT MASK** P12E	USERS **USR OUTPUTS ON** P13E
USERS **USR OUTPUTS OFF** P14E	USERS **RADIO PANIC OP** P15E	USERS **PENDANT LEARN** P18E	USERS **PENDANT DELETE** P19E	USERS **PENDANT FIND** P20E	USERS **TAG LEARN** P21E
USERS **TAG DELETE** P22E	USERS **TAG FIND** P23E				

CLOCK SETTINGS

CLOCK SETTINGS **TIME HH:MM** P26E	CLOCK SETTINGS **WEEK DAY 1-7** P26E	CLOCK SETTINGS **DATE DDMMYY** P26E	CLOCK SETTINGS **DLS STATUS** P26E	CLOCK SETTINGS **DLS SUNDAY** P27E	CLOCK SETTINGS **DLS MONTH** P28E
CLOCK SETTINGS **DLS HOUR** P29E	CLOCK SETTINGS **HOLIDAY DDMMY** P170E	CLOCK SETTINGS **TZ DAYS** P171E	CLOCK SETTINGS **TZ START** P172E	CLOCK SETTINGS **TZ END** P173E	CLOCK SETTINGS **TZ OPTIONS** P174E

DLS = daylight saving TZ = time zones

PHONE NUMBERS

PHONE NUMBERS **PHONE NUMBER** P181E	PHONE NUMBERS **PHONE FORMAT** P182E	PHONE NUMBERS **PHONE OPTIONS** P183E	PHONE NUMBERS **PHONE RETRIES** P184E	PHONE NUMBERS **PH A REPORTING** P186E	PHONE NUMBERS **PH B REPORTING** P187E
PHONE NUMBERS **PH C REPORTING** P188E	PHONE NUMBERS **PH D REPORTING** P189E	PHONE NUMBERS **DIVERT EVENTS** P192E	PHONE NUMBERS **DIVERT OPTIONS** P193E	PHONE NUMBERS **DIVERT NUM** P194E	

DIALLER

DIALLER **DIALLER A OPTION** P175E	DIALLER **DIALLER B OPTION** P175E	DIALLER **AUTO RING COUNT** P175E	DIALLER **TEST RESYNC HHMM** P175E	DIALLER **TEST PERIOD** P175E	DIALLER **KP LISTEN IN** P175E
DIALLER **OP 1 LISTEN IN** P175E	DIALLER **PREFIX NUMBER** P175E	DIALLER **PANIC CID CODE** P175E	DIALLER **FIRE CID CODE** P175E	DIALLER **MEDI CID CODE** P175E	DIALLER **OUTPUT DTMF** P175E
DIALLER **MONITOR DTMF** P175E	DIALLER **DTMF ACK. CODE** P175E	DIALLER **DTMF CALL CODE** P175E	DIALLER **PANIC MESSAGE** P176E	DIALLER **FIRE MESSAGE** P176E	DIALLER **MEDICAL MESSAGE** P176E
DIALLER **AC FAIL MESSAGE** P176E	DIALLER **AC RESTORE MSG** P176E	DIALLER **BATTERY LOW MSG** P176E	DIALLER **BATTERY OK MSG** P176E	DIALLER **TAMPER MESSAGE** P176E	DIALLER **DURESS MESSAGE** P176E
DIALLER **LATCH KEY MSG** P176E	DIALLER **REMOTE TEST MSG** P176E				

AREAS

AREAS **AREA A OPTIONS** P45E
AREAS **AREA B OPTIONS** P46E
AREAS **AREA ARM FOLLOW** P47E
AREAS **AREA STAY FOLLOW** P48E
AREAS **AREA OPEN FOLLOW** P49E
AREAS **AREA ARM CHIRP** P50E
AREAS **AREA STAY CHIRP** P51E
AREAS **AREA OPEN CHIRP** P52E
AREAS **AREA UNSTAY CHRP** P53E
AREAS **AREA ARM PULSE** P54E
AREAS **AREA STAY PULSE** P55E
AREAS **AREA OPEN PULSE** P56E
AREAS **AREA UNSTAY PLS** P57E
AREAS **AREA ARM EXIT BP** P58E
AREAS **AREA STAY EXIT B** P59E
AREAS **AREA ARM EXIT TM** P60E
AREAS **AREA STAY EXIT TM** P61E
AREAS **AREA ACCOUNT CD** P62E
AREAS **AREA DTMF CODE** P63E
AREAS **AREA MESSAGES** P64E
AREAS **AREA EXIT-OP A** P65E
AREAS **AREA EXIT-OP S** P66E
AREAS **AREA DELNQ.DAYS** P67E
AREAS **AREA ARM TZ** P68E

ZONES-MAIN

ZONES-MAIN **ZN AREAS** P121E
ZONES-MAIN **ZN A OPTIONS** P122E
ZONES-MAIN **ZN B OPTIONS** P123E
ZONES-MAIN **ZN C OPTIONS** P124E
ZONES-MAIN **ZN EOL MODE** P125E
ZONES-MAIN **ZN RESPONSE** P126E
ZONES-MAIN **ZN RADIO TYPE** P127E
ZONES-MAIN **ZN ARM BEEPS** P134E
ZONES-MAIN **ZN STAY BEEPS** P135E
ZONES-MAIN **ZN 24HR BEEPS** P136E
ZONES-MAIN **ZN CHIME BEEPS** P137E
ZONES-MAIN **ZN TAMP BEEPS** P139E
ZONES-MAIN **ZN SUPV BEEPS** P140E
ZONES-MAIN **ZN ACTV BP** P141E
ZONES-MAIN **ZN ARM ENT BP** P142E
ZONES-MAIN **ZN STAY ENT BP** P143E
ZONES-MAIN **ZN ARM ENT TM** P144E
ZONES-MAIN **ZN STAY ENT TM** P145E
ZONES-MAIN **ZN LOCKOUT TM** P146E
ZONES-MAIN **ZN AL CID CODE** P157E
ZONES-MAIN **ZN NEAR AL CID** P158E
ZONES-MAIN **ZN CONF.AL CID** P159E
ZONES-MAIN **ZN ALM VOICE MSG** P160E
ZONES-MAIN **ZN ACT TMR** P163E
ZONES-MAIN **ZN LEARN RADIO** P164E
ZONES-MAIN **ZN DEL RADIO** P165E
ZONES-MAIN **FIND RADIO** P166E

ZONES-OUTPUTS

ZONES-OUTPUTS **ZN ARM OUTS** P128E
ZONES-OUTPUTS **ZN STAY OUTS** P129E
ZONES-OUTPUTS **ZN 24HR OUTS** P130E
ZONES-OUTPUTS **ZN CHIME OUTS** P131E
ZONES-OUTPUTS **ZN TAMPER OUTS** P132E
ZONES-OUTPUTS **ZN ENTRY OP/AWAY** P161E
ZONES-OUTPUTS **ZN ENTRY OP/STAY** P162E

KEYPADS

KEYPADS **KP AREAS** P71E
KEYPADS **KP KEYS** P72E
KEYPADS **KP BEEPS** P73E
KEYPADS **KP ARM AREAS** P74E
KEYPADS **KP ARM ACCESS** P75E
KEYPADS **KP STAY AREAS** P76E
KEYPADS **KP STAY ACCESS** P77E
KEYPADS **KP A KEY AREAS** P78E
KEYPADS **KP A KEY OPTNS** P79E
KEYPADS **KP B KEY AREAS** P80E
KEYPADS **KP B KEY OPTNS** P81E
KEYPADS **KP USR OP MSK** P82E
KEYPADS **KP CONTRL MSK** P83E
KEYPADS **KP PANIC OUTS** P84E
KEYPADS **KP FIRE OUTS** P85E
KEYPADS **KP MEDI OUTS** P86E
KEYPADS **KP DURESS OUTS** P87E
KEYPADS **KP TAMP OUTS** P88E
KEYPADS **KP ERROR OUTS** P89E
KEYPADS **KP PANIC BP** P90E
KEYPADS **KP FIRE BP** P91E
KEYPADS **KP MEDI BP** P92E
KEYPADS **KP TAMP BP** P93E
KEYPADS **KP CHIME TMR** P94E
KEYPADS **PROX LED FOLLOWS** P98E
KEYPADS **READER LEARN** P99E

OUTPUTS

OUTPUTS **OP A OPTIONS** P34E	OUTPUTS **OP B OPTIONS** P35E	OUTPUTS **OP C OPTIONS** P36E	OUTPUTS **OP D OPTIONS** P37E	OUTPUTS **OP DELAY TIME** P38E	OUTPUTS **OP FLASH TIME** P39E
OUTPUTS **OP RESET TIME** P40E	OUTPUTS **OP CHIME TIME** P41E	OUTPUTS **OP MESSAGES** P42E	OUTPUTS **UN-MAP OP** P43E	OUTPUTS **TIMEZONES TO OP** P44E	

KEYSWITCH

KEYSWITCH **KEYSW AREAS** P111E	KEYSWITCH **KEYSW ACCESS** P112E

MISCELLANEOUS

MISCELLANEOUS **INSTALLER CODE** P25E	MISCELLANEOUS **DURESS DIGIT** P25E	MISCELLANEOUS **REPORTING DELAY** P25E	MISCELLANEOUS **SUPERVISED TIMER** P25E	MISCELLANEOUS **TWO TRIGGER TIME** P25E	MISCELLANEOUS **AC FAIL DELAY** P25E
MISCELLANEOUS **RADIO RESET TIME** P25E	MISCELLANEOUS **SECURITY CODE** P25E	MISCELLANEOUS **TEMP O/P DISABLE** P25E	MISCELLANEOUS **MISC OPTIONS** P25E	MISCELLANEOUS **INSTALLER OPTS** P25E	

4+2 EVENT CODES

4+2 EVENT CODES **USR ARM 4+2** P16E	4+2 EVENT CODES **USR OPEN 4+2** P17E	4+2 EVENT CODES **ZN ALARM 4+2** P147E	4+2 EVENT CODES **ZN RESTORE 4+2** P148E	4+2 EVENT CODES **ZN NEAR ALM 4+2** P149E	4+2 EVENT CODES **ZN NEAR RST 4+2** P150E
4+2 EVENT CODES **ZN CONF.ALM 4+2** P151E	4+2 EVENT CODES **ZN CONF.RST 4+2** P152E	4+2 EVENT CODES **ZN BYPASS 4+2** P155E	4+2 EVENT CODES **ZN UNBYP 4+2** P156E	4+2 EVENT CODES **AC FAIL 4+2** P195E	4+2 EVENT CODES **AC OK 4+2** P195E
4+2 EVENT CODES **BATTERY LOW 4+2** P195E	4+2 EVENT CODES **BATTERY OK 4+2** P195E	4+2 EVENT CODES **TAMPER 4+2** P195E	4+2 EVENT CODES **TAMPER RESET 4+2** P195E	4+2 EVENT CODES **REMOTE ARM 4+2** P195E	4+2 EVENT CODES **REMOTE OPEN 4+2** P195E
4+2 EVENT CODES **DURESS 4+2** P195E	4+2 EVENT CODES **TEST CALL 4+2** P195E	4+2 EVENT CODES **ARM BUTTON 4+2** P195E	4+2 EVENT CODES **STAY MODE 4+2** P195E	4+2 EVENT CODES **ARM/STAY OFF 4+2** P195E	4+2 EVENT CODES **KS ARM 4+2** P195E
4+2 EVENT CODES **KS OPEN 4+2** P195E	4+2 EVENT CODES **T/Z ARM FAIL 4+2** P195E	4+2 EVENT CODES **KP PANIC 4+2** P195E	4+2 EVENT CODES **KP PANIC OK 4+2** P195E	4+2 EVENT CODES **KP FIRE 4+2** P195E	4+2 EVENT CODES **KP FIRE OK 4+2** P195E
4+2 EVENT CODES **KP MEDI 4+2** P195E	4+2 EVENT CODES **KP MEDI OK 4+2** P195E				

DIAGNOSTICS

DIAGNOSTICS **PANEL VERSION** P200E	DIAGNOSTICS **THIS KEYPAD** P200E	DIAGNOSTICS **AREAS FOR KEYPAD** P200E	DIAGNOSTICS **ACTIVE TIMEZONES** P200E	DIAGNOSTICS **BATTERY VOLTAGE** P200E	DIAGNOSTICS **WALK TEST MODE** P200E
DIAGNOSTICS **WRITE TO EEPROM** P200E	DIAGNOSTICS **READ FROM EEPROM** P200E	DIAGNOSTICS **CLEAR USER/PHONE** P200E	DIAGNOSTICS **CLEAR ALL** P200E	DIAGNOSTICS **CLEAR MEM BUFFER** P200E	DIAGNOSTICS **START CALLBACK** P200E

SPECIAL KEYPAD OPERATING FEATURES

ARMING or DISARMING TWO AREAS at a KEYPAD

If the panel is configured for two Areas “A&B”, and the option “ARM” button required before code is turned on (P45E Option 1), there are a number of possible arming options.

If a user code is only assigned to one area and they press <ARM> <CODE> <ENTER> at the keypad, only the Area assigned to their code will Arm.

If a user code is assigned to both areas but the keypad being used is only assigned to one area, pressing <ARM> <CODE> <ENTER> will only arm the area assigned to the keypad.

If a user code is assigned to both areas and the keypad being used is also assigned to both areas, pressing <ARM> <CODE> <ENTER> will put the keypad into a “Ready to Arm” state. On the LCD keypad the display will show “Area/s to Arm” “A B”, and on the LED keypad LED’s 1 & 2 (LED 1 = Area A & LED 2 = Area B) will turn on. If you press the <ENTER> button now, both areas A&B will arm. If before pressing the enter button you wish to de-select one of the Areas eg if you only want to arm area B press the number “1” and Area “A” will disappear on the LCD keypad display or the number “1” will turn off on the LED keypad indicating that only area B will arm when the enter button is pressed.
The number “1” will toggle area A on/off and the number “2” will toggle area B on/off.
If you don’t do anything the panel will proceed with arming both areas after 10 seconds time has elapsed.
On disarming, after entering <CODE> <ENTER> the display on the LCD keypad will show “Area/s to Disarm” “A B”, and on the LED keypad LED’s 1 & 2. You can press the <ENTER> button at this point to disarm both areas, select which area you wish to disarm by using the numbers 1 & 2 on the keypad, or if you don’t do anything the panel will proceed with disarming both areas after 10 seconds time has elapsed.

LCD QUICKVIEW MODE

If any zones are unsealed when disarmed the LCD keypad will scroll through each unsealed zone displaying the 16 character name for each zone. If a number of zones are unsealed simultaneously it can take sometime for the display to show all of the unsealed zones.
By pressing the <ENTER> button when zones are unsealed the keypad will enter the “Quick-view” mode. When in “Quick-view” mode, each unsealed zone is displayed as a single two digit number eg “01 05 10”. Up to 5 unsealed zones maybe displayed at one time. If more than 5 zones are unsealed at the time the display will scroll to the next bank of 5 zones so the user can see quickly which zones are unsealed. To exit “Quick-view” mode you simply press the <ENTER> button again or the keypad will time out automatically in approximately 30 seconds.

TOGGLE CHIME MODE ON/OFF

On the Crow LCD Keypad there is a “CHIME” button. Pressing and holding that button for two seconds will toggle Chime Mode from On-Off or Off-On.
On the AAP LCD keypad or the LED Keypads, there is no chime button so the Control & Program buttons are used. By pressing and holding the <CONTROL> button then within 2 seconds also pressing the <PROGRAM> button, you will toggle Chime Mode from On-Off or Off-On. On the LED keypad the “AUX(0)” LED will turn on when chime mode is off.

SEND MANUAL TEST CALL

If the panel is configured for Contact ID reporting and test calls are programmed to report, you can force a manual test call by pressing and holding <CONTROL> followed within 2 seconds by <0>. This will cause a manual test call to be sent to the monitoring company. You can also dial into the panel from a remote site and using the telephone cause a manual test call remotely. See P175E15E and P176E11E for details.

MANUALLY ANSWER AN INCOMING CALL

If the panel is not configured to answer in-coming calls, the user can force it to answer the call by pressing and holding <CONTROL> followed within 2 seconds by <9>. This will make the panel answer the call immediately. For this function to work the phone line must be ringing at the time and there must have been at least two rings before pressing the buttons.

+++++USER Programming+++++

Note: Where there are up to 8 options at one address, the digits 0 & 9 have special functions. Entering a 0 at the address will turn all options off whereas entering a 9 will turn all options on.

USER CODES - P1E 1-100E (NOTE: Users 21-100 can be Radio Users)

Adding or changing a User Code

Up to 100 codes can be programmed into the panel. The user codes are located in address P1E 1-100E.
By default, Code 1 has Master Code permissions and must be used to enter Client program mode.
Codes 1-100 may be varied in length from 1 to 6 digits (unless option 8 at P25E11E is on then the codes must be between 4-6 digits long).

To program a User Code you must first be in client or installer program mode, then select the address P1E followed by the User Number you wish to program eg 1-100E (If there is already a code programmed at this address, it will be displayed back to you) Now enter the code then press the <**ENTER>** key.

eg. P1E2E 2580 E
3 beeps - program light on solid or flashing

In this example we have programmed Code 2 to be 2580.

eg. P1E5E 9876 E
3 beeps - program light on solid or flashing

In this example we have programmed code 5 to be 9876
To replace a code simply enter the new code in the same address as the old code. This will overwrite the previous code but maintain the user permissions as mapped to that user number.

NOTE: When displaying User Codes on an LED keypad, digits 1-9 use the zone indicators 1-9. The digit 0 is indicated by the "AUX" light.

Removing a User Code

To remove or delete a code simply press the <BYPASS> button after entering the code address when using an LED keypad, or press and hold the <CONTROL> button then within 2 seconds press the <0> button if using an LCD keypad.

eg. LED Keypad press P1E3E <*BYPASS*> E
3 beeps - Program light on solid or flashing
User Code # 3 Erased

eg. LCD Keypad press P1E3E <*CONTROL*> then <0>
3 beeps
User Code # 3 Erased

USER CODE TYPE

USER CODE TYPE - P2E 1-100E (NOTE: only Users 21-100 can be Radio Users)

Option 0 - Keypad Code User {PIN}
Option 1 - Radio user (User 21-100 only)
Option 2 - Access Tag/Card User
Option 3 - Both Code and Access Tag/Card User {Tag + PIN}
Option 4 - Either Code or Access Tag/Card User {Tag or PIN}

Option 0 **Keypad Code User {PIN}** - All 100 Users can be 1-6 digit code Users if required. Codes can be used to Arm/Disarm all or part of the alarm or they can be used to operate outputs for access

control purposes. Users can be assigned to keypads and so can outputs so that a User assigned to multiple outputs (which can in turn be linked to doors) can operate only the door assigned to the keypad they are using.

Option 1 **Radio User** - Users 21-100 can be Radio keys (Pendant) if required. Radio keys can be used to Arm/ Disarm all or part of the alarm or they can operate outputs directly. Unlike user codes, a radio key cannot be assigned to a keypad so if a radio key is assigned to more than one output and the radio key is operated, all of the outputs assigned to the radio key will turn on.

Option 2 **Access Tag/Card User** - Users 1-100 can be Access Tags or Cards if required. Access Tag or Card operation requires that the optional Proximity Reader is connected to the panel. The Proximity Readers can be assigned to any one of the 8 possible keypad addresses. Access tag or Card Users can be used to Arm/Disarm all or part of the alarm or they can be used to operate outputs for access control purposes. Access Tags or Cards can be assigned to a keypad address and so can outputs so that an Access User assigned to multiple outputs (which can in turn be linked to doors) can operate only the door assigned to the keypad address they are using.

Option 3 **Both Code and Access Tag/Card User {Tag + PIN}** - Up to 100 code Users and up 100 tag or card Users can be stored in the panel. If the Proximity Reader with the full keypad is installed on the panel, it is possible to arm/disarm the alarm or gain access through a door by presenting the tag/card at the reader then entering in the user code {PIN Number}. It MUST be in that order ie Tag then PIN. This option provides a more secure means of arming or disarming the alarm, or gaining access through a door, because it requires both the access tag/card plus the PIN number.

Option 4 **Either Code or Access Tag/Card User {Tag or PIN}** - Up to 100 code Users and up 100 tag or card Users can be stored in the panel. If the Proximity Reader with the full keypad is installed on the panel, it is possible to arm/disarm the alarm or gain access through a door by entering in the user code at the reader or presenting the tag/card at the reader. This option gives two methods of controlling the alarm.

USER AREAS

USER AREAS - P3E 1-100E

Option 1 - Assigned to Area A
Option 2 - Assigned to Area B

Option 1 **Assigned to Area A** - If a User has option 1 on, they can Arm/Disarm all zones assigned to Area A

Option 2 **Assigned to Area B** - If a User has option 2 on, they can Arm/Disarm all zones assigned to Area B

USER ACCESS OPTIONS

USER ACCESS OPTIONS - P4E 1-100E

Option 1 - User can Arm Area
Option 2 - User can Arm Stay Area
Option 3 - User can Disarm Area
Option 4 - User can Disarm Stay Area
Option 5 - User is a Security Guard User
Option 6 - User will Arm Latchkey Mode
Option 7 - User can set Call Divert Mode on Arm/Disarm
Option 8 - Spare

Option 1 **User can Arm Area** - If a User has option 1 on, they can Arm all Areas assigned at location P3E.

Option 2 **User can Arm Stay Area** - If a User has option 2 on, they can Arm Stay Mode for all Areas assigned at location P3E.

Option 3 **User can Disarm Area** - If a User has option 3 on, they can Disarm all Areas assigned at location P3E.

Option 4 **User can Disarm Stay Area** - If a User has option 4 on, they can Disarm Stay Mode for all Areas assigned at location P3E.

Option 5 **User is a Security Guard User** - If a User has option 5 on, they can Arm all Areas assigned at location

P3E, but they may only Disarm if the panel is currently Armed and in the alarm state.

Option 6 **User will Arm Latchkey Mode** - If this option is ON, the User will Arm the alarm in Latchkey Mode. Latchkey Mode can also be armed by using the <ARM>, <STAY>, <A> or <B> buttons, (see P75E, P77E, P79E & P81E option 6) or the key-switch (see P112E option 6). If a User with this option ON Disarms the alarm no Latchkey Disarm report will be sent via the dialler. If Latchkey Mode is Armed and a user with this option turned OFF Disarms the alarm a Latchkey disarm report will be sent to alert parents when their children have returned home. Reporting of Latchkey Disarm is enabled at location (P189E option 1). If a Voice report is desired the message is assigned at P176E10E. Normally you would select a telephone number/s set for domestic or voice reporting to report the Latchkey disarm signal.

Option 7 **User can set Call Divert Mode on Arm/Disarm** - If a User has option 7 on, they can initiate the Call Divert Number/s to be dialled on Arm/Disarm. This allows automatic call diversion when the alarm is Armed and taking the diversion off when Disarmed. Call divert must also be programmed (P192-194E).

USER CODE PRIVILEGES

USER CODE PRIVILEGES - P5E 1-100E **(see chart on page 112 for the exact program locations)**

Option 1 - User can Change Their Code
Option 2 - User can Change All Codes
Option 3 - User can Allow Access to Installer Mode/Edit All Codes
Option 4 - User can Change Telephone Numbers
Option 5 - User can Change Clock Settings
Option 6 - User can Change DTMF Codes
Option 7 - User can Learn New Radio Devices
Option 8 - User can Force a Download to the Call-back Number

Option 1 **User can Change Their Code** - If a User has option 1 on, they can access Client Program Mode and change their code number.

Option 2 **User can Change All Codes** - If a User has option 2 on, they can access Client Program Mode and change All User code numbers.

Option 3 **User can Allow access to Installer Mode/Edit All Codes** - If a User has option 3 on, they can access Client program Mode. From there an Installer with the correct Installer Code can access Installer Program Mode. The User with this option can also edit all User Codes and associated parameters as shown in the chart on page 112.

Option 4 **User can Change Telephone Numbers** - If a User has option 4 on, they can access Client Program Mode and change the telephone and call divert numbers.

Option 5 **User can Change Clock Settings** - If a User has option 5 on, they can access Client Program Mode and change the Time & date settings as well as daylight saving sart and finish times.

Option 6 **User can Change DTMF Codes** - If a User has option 6 on, they can access Client Program Mode and change the DTMF Codes. A DTMF Code can be used to remotely Arm/Disarm an Area, turn Output/s On/Off or Acknowledge a Voice/Domestic alarm.

Option 7 **User can Learn New Radio Devices** - If a User has option 7 on, they can access Client Program Mode and Learn a new Radio Key or Wireless Zone Device. They can also remove radio devices or find what location number a device is stored at.

Option 8 **User can Force a Download to the Call-back Number** - If a User has option 8 on, they can access Client Program Mode and force a PC connection to a pre-defined call-back number. They can either enter in P200E12E or if using an LCD keypad go to the “Diagnostics” Menu and select “Start Callback”.

RADIO USER TYPE

RADIO USER TYPE - P7E 21-100E (NOTE: only Users 21-100 can be Radio Users)

Option 0 - Generic (General Pendant Type)

Option 1 - Crow Freelink Pendant
Option 21 - Ness Pendant

Option 0 **Generic Type** - If a Radio Pendant has no special functions and does not send a battery low signal it is a Generic type 0.

Option 1 **Crow Freelink Type** - If a Crow Freelink Radio Pendant is being used set the type to 1. When the pendant detects a battery low it will send a signal to the panel.

Option 21 **Ness Type** - If a Ness Radio Pendant is being used set the type to 21. When the pendant detects a battery low it will send a signal to the panel.

RADIO USER PRIVILEGES

RADIO USER PRIVILEGES - P8E 21-100E (NOTE: only Users 21-100 can be Radio Users)

Option 1 - Pendant can Disarm at All Times
Option 2 - Pendant will cause an Immediate Panic Alarm
Option 3 - Pendant will cause a Delayed Panic Alarm (1.5 sec)
Option 4 - Spare
Option 5 - Spare
Option 6 - Spare
Option 7 - Spare
Option 8 - Spare

Option 1 **Pendant can Disarm at All Times** - If a Radio Pendant has option 1 on, they can Disarm the alarm at any time. If this option is off, the pendant cannot disarm if the panel is in alarm state.

Option 2 **Pendant will cause an Immediate Panic Alarm** - If a Radio Pendant has option 2 on, a Panic Alarm will be generated immediately the button is pressed.

Option 3 **Pendant will cause a Delayed Panic Alarm** - If a Radio Pendant has option 3 on, a Panic Alarm will be generated if the button is pressed for longer that 1.5 seconds. If the button is released before the time expires, no Panic Alarm will be generated.

TIMEZONE ASSIGNED to a USER

TIMEZONE ASSIGNED to a USER - P9E 1-100E

Option 1 - User Controlled by Time Zone # 1
Option 2 - User Controlled by Time Zone # 2
Option 3 - User Controlled by Time Zone # 3
Option 4 - User Controlled by Time Zone # 4
Option 5 - User Controlled by Time Zone # 5
Option 6 - User Controlled by Time Zone # 6
Option 7 - User Controlled by Time Zone # 7
Option 8 - User Controlled by Time Zone # 8

There are up to 8 Time Zones that can be programmed into the panel. A Time Zone consists of a Start and Stop time plus the Days of the Week that the Time Zone is active. By selecting Options 1-8 (function turned on) to a particular User, that user will only operate if the Time Zone assigned is active.

For example, if Time Zone #1 had a start time of 0800 and a stop time of 1700 and active days of 2-6 (Monday-Friday), a User with Time Zone 1 assigned can only be used between the hours of 0800-1700 from Monday to Friday. Outside these hours the User Code will not operate.

More than one Time Zone can be assigned to a User. Using the above example for TZ#1 and now assuming Time Zone #2 is set to 0900-1200 on day 7 (Saturday), by assigning both TZ1 & 2 to a User will now mean their code is active during weekdays from 0800-1700 plus they are also able to use their code on Saturdays between the hours of 0900-1200.
If the time-zone has just been programmed and should currently be active you will have to wait until the next minute expires before the panel will update the time-zone status. You can see if the time-zone is active at location P200E4E.

USER to KEYPAD ASSIGNMENT

USER to KEYPAD ASSIGNMENT - P10E 1-100E

Option 1 - User will work at Keypad # 1
Option 2 - User will work at Keypad # 2
Option 3 - User will work at Keypad # 3
Option 4 - User will work at Keypad # 4
Option 5 - User will work at Keypad # 5
Option 6 - User will work at Keypad # 6
Option 7 - User will work at Keypad # 7
Option 8 - User will work at Keypad # 8

Any user can be assigned to only operate at certain Keypads. This option controls whether a code or access tag User can Arm/Disarm from certain keypads. This option does not restrict users from operating outputs from a particular keypad (this is done at locations P82E & P83E).

RADIO PENDANT PANIC BEEPS to KEYPAD

RADIO PENDANT PANIC BEEPS to KEYPAD - P11E 21-100E (NOTE: only Users 21-100 can be Radio Users)

Option 1 - A Pendant Panic Alarm will Beep at Keypad # 1
Option 2 - A Pendant Panic Alarm will Beep at Keypad # 2
Option 3 - A Pendant Panic Alarm will Beep at Keypad # 3
Option 4 - A Pendant Panic Alarm will Beep at Keypad # 4
Option 5 - A Pendant Panic Alarm will Beep at Keypad # 5
Option 6 - A Pendant Panic Alarm will Beep at Keypad # 6
Option 7 - A Pendant Panic Alarm will Beep at Keypad # 7
Option 8 - A Pendant Panic Alarm will Beep at Keypad # 8

If a Radio Pendant is programmed to create a Panic Alarm (see P8E), when the Panic Alarm is activated it can be silent or it can sound the keypad buzzer. Each keypad can be silent during a Pendant Panic Alarm (option turned off) or can give an audible indication of the Alarm (option turned on).

USER to OUTPUT MASK

USER to OUTPUT MASK - P12E 1-100E

Option 1 - User is Mapped to Output # 1
Option 2 - User is Mapped to Output # 2
Option 3 - User is Mapped to Output # 3
Option 4 - User is Mapped to Output # 4
Option 5 - User is Mapped to Output # 5
Option 6 - User is Mapped to Output # 6
Option 7 - User is Mapped to Output # 7
Option 8 - User is Mapped to Output # 8

Any user can be allowed to only operate certain Outputs. This Function is mainly used for access control purposes. If an Output is being used to open a door but a User does not have access through that door, by not allowing the User to operate that Output access through the door can be denied.

USER can turn an OUTPUT ON

USER can turn an OUTPUT ON - P13E 1-100E

Option 1 - User can turn ON Output # 1
Option 2 - User can turn ON Output # 2
Option 3 - User can turn ON Output # 3
Option 4 - User can turn ON Output # 4
Option 5 - User can turn ON Output # 5
Option 6 - User can turn ON Output # 6
Option 7 - User can turn ON Output # 7
Option 8 - User can turn ON Output # 8

Any user can be allowed to turn an Output ON. This Function can be used to control external devices via the panel keypad with a User assigned to that Output. Once an Output is turned ON by a User, the Output can turn OFF again automatically if a reset time is assigned to the Output, or it can be turned off by the same user or by a different user with the next program location.

USER can turn an OUTPUT OFF

USER can turn an OUTPUT OFF - P14E 1-100E

Option 1 - User can turn OFF Output # 1
Option 2 - User can turn OFF Output # 2
Option 3 - User can turn OFF Output # 3
Option 4 - User can turn OFF Output # 4
Option 5 - User can turn OFF Output # 5
Option 6 - User can turn OFF Output # 6
Option 7 - User can turn OFF Output # 7
Option 8 - User can turn OFF Output # 8

Any user can be allowed to turn an Output OFF. This Function can be used to control external devices via the panel keypad with a User assigned to that Output. Once an Output is turned OFF by a User, the Output can be turned on by the same user or by a different user with the previous program location.

RADIO PENDANT PANIC ALARM to OUTPUT

RADIO PENDANT PANIC ALARM to OUTPUT - P15E 21-100E (NOTE: only Users 21-100 can be Radio Users)

Option 1 - A Pendant Panic Alarm will Operate Output # 1
Option 2 - A Pendant Panic Alarm will Operate Output # 2
Option 3 - A Pendant Panic Alarm will Operate Output # 3
Option 4 - A Pendant Panic Alarm will Operate Output # 4
Option 5 - A Pendant Panic Alarm will Operate Output # 5
Option 6 - A Pendant Panic Alarm will Operate Output # 6
Option 7 - A Pendant Panic Alarm will Operate Output # 7
Option 8 - A Pendant Panic Alarm will Operate Output # 8

If a Radio Pendant is programmed to create a Panic Alarm (see P8E), when the Panic Alarm is activated it can be silent or it can turn on an Output. This option would normally be used to turn on any internal and/or external audible alarms connected to Outputs during a Pendant Panic Alarm.

LEARN RADIO PENDANT CODES

LEARN RADIO PENDANT CODES - P18E 21-100E (NOTE: only Users 21-100 can be Radio Pendants)

A Radio Pendant must be enrolled into the panel before it can be used.

To learn a Radio Pendant you must first have a compatible receiver connected to the panel keypad buss. With the receiver connected and the panel in program mode, entering P18E then the pendant number you wish to enrol, eg 21E for pendant 21, the keypad will start to beep to indicate that learn mode has been started and the LED on the receiver will flash. Now operate the pendant you wish to learn into User slot 21. Once the transmitted code has been received by the panel and saved as pendant 21, the keypad will stop beeping and the LED on the receiver will stop flashing.

When learning a new radio code the panel checks all possible locations (including radio zones) before saving the new code to ensure that the code has not already been loaded into another slot. If the code already exists, the keypad will indicate which slot the code is already installed at. A number from 1-16 indicates a zone slot and a number from 21-100 indicates a user slot.

DELETE a RADIO PENDANT CODE

DELETE a RADIO PENDANT CODE - P19E 21-100E (NOTE: only Users 21-100 can be Radio Pendants)

If you wish to delete a single Radio Pendant, pressing P19E then the Pendant User number while in Program Mode will delete the stored code against that User, eg P19E 21E will remove the code stored for User 21.

FIND a RADIO PENDANT LOCATION

FIND a RADIO PENDANT LOCATION - P20E 0E (NOTE: only Users 21-100 can be Radio Pendants)

If you have a Radio Pendant loaded into the panel but are unsure which location (User #), pressing P20E (then 0E on an LED Keypad) while in Program Mode will start “Find” Mode. There is no need to press 0E when using an LCD keypad because the keypad will give you written prompts after entering P20E. The keypad will start to beep to indicate that “Find” mode has been started and the LED on the Receiver will flash. Now press the Radio Pendant button that you wish to find. If the Radio Pendant is in memory the keypad will display the number (1-16 indicates a zone, and 21-100 indicates a user). The keypad will stop beeping and the LED on the Receiver will stop flashing.

LEARN ACCESS TAG/CARD CODES

LEARN ACCESS TAG/CARD CODES - P21E 1-100E

An Access Tag/Card must be enrolled into the panel before it can be used. The panel can have up to 100 proximity tags (key-ring style card), or proximity cards loaded into the system. The tags or cards are stored separately to the User Codes but they follow the options of Users 1-100 programmed at locations P2E, P3E, P4E, P9E, P10E, P12E, P13E & P14E. For example if user 11 is assigned to area A (P3E Option 1), and can arm/ disarm the alarm (P4E Options 1 & 3), then access Tag/Card number 11 will arm/disarm area A also.

To learn an Access Tag/Card you must first have a compatible proximity reader connected to the panel keypad buss. With the reader connected and the panel in program mode, entering P21E then the Access tag/card number you wish to enrol, eg 11E for Tag/Card number 11, the keypad will start to beep to indicate that learn mode has been started. Now present the Access Tag/card to the reader. Once the Tag/Card number has been received by the panel and saved, the keypad will stop beeping to indicate learn mode has stopped.
When learning a new access Tag/Card the panel checks all possible locations before saving the new code to ensure that the code has not already been loaded. If the tag or card already exists, the panel will not terminate learn mode but instead it will continue looking for a new tag or card to be presented. This allows a new tag or card to be learnt while existing tags or cards may be in use on the system.
After learning the tag or card, before it will work you MUST select the appropriate option at location P2E (options 2, 3 or 4 must be selected for the tag to work).

DELETE an ACCESS TAG/CARD CODE

DELETE an ACCESS TAG/CARD CODE - P22E 1-100E

If you wish to delete a single Access Tag or Card, pressing P22E then the User number while in Program Mode will delete the stored code against that User, eg P22E 11E will remove the tag or Card stored for User 11.

FIND an ACCESS TAG/CARD LOCATION

FIND an ACCESS TAG/CARD LOCATION - P23E 0E

If you have an Access Tag or Card loaded into the panel but are unsure which location (User #), pressing P22E (then 0E on an LED Keypad) while in Program Mode will start “Find” Mode. There is no need to press 0E when using an LCD keypad because the keypad will give you written prompts after entering P22E. The keypad will start to beep to indicate that “Find” mode has been started. Now present the Access Tag or Card you wish to find to a proximity reader connected to the panel. If the Tag or Card is in memory the keypad will display the number where the Tag or Card is stored (a number from 1-100). The keypad will stop beeping once the memory location has been found.

INSTALLER CODE

INSTALLER CODE - P25E 1E

This code is used to enter full Installer Program mode (Program LED flashing on LED Keypad). The default installer code is 000000. This code can only be changed while in Installer Program Mode. To enter your new installer code press P25E1E. The existing code will displayed at the keypad (either each digit flashed out sequentially on an LED keypad or shown on the bottom line of the LCD keypad). To change the code simply enter the digits of the new code and it will replace the old one. The Installer Code must be between 4-6 digits in length.

DURESS DIGIT

DURESS DIGIT - P25E 2E (Value can be 1-9, 0 = Duress Disabled)

The duress digit can be a number from 1-9 (a value of “0” means the duress function is disabled).
To create a duress alarm the duress digit must be entered before a valid user code (eg If the code was “123” and the duress number was “4”, then entering a code of <4123> <ENTER> would create a duress alarm).

DIAL REPORT DELAY

DIAL REPORT DELAY - P25E 3E (0-255 Seconds)

If this address is set to 0, there will be no report delay. If it is set to any value other than 0 then a delay equal to the programmed value will stop the panel from reporting an alarm until this delay time expires.

RADIO ZONE SUPERVISED TIMER

RADIO ZONE SUPERVISED TIMER - P25E 4E (Value 0-9999 Minutes)

If a radio detector is capable of sending regular supervisory signals to the panel and the zone type is set for “Supervised Signal Active”, this timer sets how long a period has to elapse with no received transmissions before a supervisory failure alarm is generated.

TWO TRIGGER TIMER

TWO TRIGGER TIMER - P25E 5E (0-255 Seconds)

If a zone is set to two trigger, the zone has to cause an alarm twice within the two trigger time period to cause an alarm. If multiple zones are set to two trigger, an alarm will be generated it two zones trigger once each within the two trigger time period. If a two trigger zone goes into alarm but remains in alarm for longer than the two trigger time period (ie detector failure or cable cut) an alarm will be generated.

MAINS FAIL REPORTING DELAY

MAINS FAIL REPORTING DELAY - P25E 6E (0-9999 Seconds)

If a Mains Failure occurs this timer delays the reporting of Mains Failure to a Monitoring Station. If the mains power returns before the timer expires then no report is sent. If Mains Failure is assigned to an output, this delay must expire before the output will turn on.

RECEIVER FAIL DELAY

RECEIVER FAIL DELAY - P25E 7E (0-9999 Seconds)

If supervised radio detectors are used, the receiver will be seeing regular transmissions. Because of this, the panel can monitor receiver activity to check that the receiver is still working. If the panel does not receive any

signals within this time period a receiver failure alarm will be generated. If set to 0, the receiver monitoring will be turned off.

UPLOAD/DOWNLOAD SITE CODE NUMBER

UPLOAD/DOWNLOAD SITE CODE NUMBER - P25E 8E (8 characters)

The upload/download site code number must be entered if the panel is set for auto-answer as this provides a security access level to the panel. The number can be up to 8 characters in length. Valid characters for this number are 0-9,B-F. See chart on page 55 for details of how to program the characters B-F.

TEMPORARY OUTPUT DISABLE

TEMPORARY OUTPUT DISABLE - P25E 9E (Select output # 1-8)

This address allows a technician to select any output/s to be temporarily disabled for one alarm or armed cycle, eg by selecting LEDS 1-4 (Outputs 1-4) at this location then leaving program mode, outputs 1-4 will not turn on following any alarms. The technician is now free to arm the system to test all monitoring signals without having any internal and/or external alarms activating. When the alarm is reset or disarmed all outputs will now work normally again.

MISCELLANEOUS PANEL OPTIONS

MISCELLANEOUS PANEL OPTIONS - P25E 10E

Option 1 - Panel Tamper is 2k2 EOL
Option 2 - Direct access to program mode for the Installer Code
Option 3 - Disable Mains Fail Test
Option 4 - Listen-in to O/P # 1 Low Volume
Option 5 - Receiver Fail Lockout
Option 6 - Send Output information to Keypad Buss
Option 7 - Cannot Arm if the System Battery is Low
Option 8 - Installer Lockout

Option 1 **Panel Tamper is 2k2 EOL** - The Tamper input (Tmp) on the control panel requires either a short circuit or a 2k2 End-of-Line resistor. If option 1 is on the panel must see a 2k2 resistor (EOL) across the Tmp & 0V terminals to ensure the tamper is sealed. If this option is turned off then a simple short circuit is all that is required to seal the panel tamper.

Option 2 **Direct access to program mode for the Installer Code** - If this option is on, the Installer Code can gain access to Installer Program Mode directly. If the option is turned off, the installer can only gain access to Installer Program Mode via Client Program Mode. This option allows the owner to control program mode access by the installer. The User must have option 3 at location P5E turned on for them to allow installer access.

Option 3 **Disable Mains Fail Test -** If the panel must be run off a DC supply or the Mains supply can fail regularly, this option disables the mains voltage monitoring to prevent mains fail alarms from occurring.

Option 4 **Listen-in to O/P # 1 Low Volume -** If Listen-In to Output 1 is turned on (P175E8E), the level of sound from the speaker can be controlled with this option. If this option is Off the sound level during listen-in to O/P 1 is high volume, turning this option On makes the sound level low volume. For listen-in to Output 1 to work the device connected to O/P 1 must be an 8Ω speaker and the output must be modulated (P35E1E Option 1 on). Failure to do this could result in damage to the speaker & output.

Option 5 **Receiver Fail Lockout -** If the receiver fail delay (P25E7E) is set to a value other than 0 and the panel sees no activity from the receiver for the set period of time, a receiver fail alarm will be generated. If this option is turned on, the panel cannot be armed until the cause of the receiver failure has been resolved.

Option 6 **Send Output information to Keypad Buss -** There is an optional 4 x relay output expander board that can be connected to the keypad buss if required. For this output expander to work option 6 must be turned on for the data to be sent on the keypad buss to the expander.

Option 7 **Cannot Arm if System battery is Low** - If the panel battery is low, normally you can arm the panel leaving the battery to charge over a period of time. If this option is turned on, the panel cannot be armed until the battery is either fully charged again, or it has been replaced (if faulty).

Option 8 **Installer Lockout** - Normally if the panel is powered up with the panel tamper open (ie system tamper alarm active) and in the Disarm state, then the panel will go into installer program mode when the <PROGRAM> then <ENTER> buttons are pressed. If this option is on, the panel will not allow access to program mode on power-up and the only valid method of accessing program mode is via the installer code.

INSTALLER OPTIONS

INSTALLER OPTIONS - P25E 11E

Option 1 - Entry to Installer Mode Resets Confirmed Alarms
Option 2 - Entry to Installer Mode Resets Tamper Alarms
Option 3 - Entry to Installer Mode Resets Low Battery Alarm
Option 4 - Entry to Installer Mode Resets Supervisory Alarms
Option 5-7 - Spare
Option 8 - User Codes Must be 4-6 digits long

Option 1 **Entry to Installer Mode Resets Confirmed Alarms** - If this option is turned on and a Confirmed alarm has occurred, the alarm cannot be re-armed until the Installer has reset the alarm. The Installer must access Installer Program Mode via Client Mode to reset the system. The zones that caused the alarm will latch on (even when disarmed) until reset by the installer to indicate that lockout is in effect.

Option 2 **Entry to Installer Mode Resets Tamper Alarms** - If this option is turned on and a Tamper alarm has occurred (system or zone tampers), the alarm cannot be re-armed until the Installer has reset the alarm. The Installer must access Installer Program Mode via Client Mode to reset the system. The Trouble indication will latch on (even if the tamper alarm has been cleared) until reset by the installer to indicate that lockout is in effect.

Option 3 **Entry to Installer Mode Resets Low Battery Alarm** - If this option is turned on and a Low Battery alarm has occurred, the Installer must access Installer Program Mode via Client Mode to reset the battery low signal. If option 7 is turned on at location P25E10E the alarm cannot be re-armed until the Installer has reset the battery low signal.

Option 4 **Entry to Installer Mode Resets Supervisory Alarms** - If this option is turned on and a Detector Supervisory alarm has occurred, the alarm cannot be re-armed until the Installer has reset the alarm. The Installer must access Installer Program Mode via Client Mode to reset the supervisory alarm.

Option 8 **User Codes Must be 4-6 Digits** - If this option is turned on, all User Codes must be between 4-6 digits long. If it is turned off, the User Codes can be 1-6 digits long.

USER OPTIONS

USER OPTIONS - P25E 12E **(NOTE: This Option can ONLY be accessed from Client Mode)**

Option 1 - Hide User Codes from Installer

Option 1 **Hide User Codes from Installer** - This option is only accessible from Client Program Mode. It is designed to allow the User (owner) of the alarm to hide their User Codes from the Installer if desired. If this option is turned On, codes can only be changed or viewed in Client program mode. Users MUST have option 2 at location P5E assigned before they can hide the user codes.

SETTING REAL TIME CLOCK

REAL TIME CLOCK HOUR/MINUTE - P26E 1E (Value 0-2359)
REAL TIME CLOCK DAY of WEEK - P26E 2E (Value 1-7) [where 1 = Sunday, 2 = Monday, 3 = Tuesday, etc]
REAL TIME CLOCK DATE/MONTH/YEAR - P26E 3E (Value DDMMYY) (for example 020904 = 2nd September, 2004)

The Real Time Clock controls the Time-zones, the timing of automatic test calls and is used to Time & Date stamp the events in the Event Buffer. Ensure this is set correctly at the time of installation so that the all of the functions using the time have will work correctly. The clock is programmed in 24 hour format (eg 00:00-23:59).

DAYLIGHT SAVING (DLS) SETTINGS

DAYLIGHT SAVING ACTIVE - P26E 4E (If LED # 1 is On, Daylight Saving is currently active)

NOTE: If you are in Daylight Saving Time when the alarm system is installed you MUST turn on option 1 at location P26E6E so that the panel knows that Daylight Saving Time is currently active. Failure to do this will not allow the clock to automatically adjust to the correct time when Daylight Saving Time Ends.

DAYLIGHT SAVING START SUNDAY - P26E 1E (Value 0-5, 0= DLS Disabled, 5 = Last Sunday of Month)
DAYLIGHT SAVING END SUNDAY - P26E 1E (Value 0-5, 0= DLS Disabled, 5 = Last Sunday of Month)

DAYLIGHT SAVING START MONTH - P26E 1E (Value 1-12)
DAYLIGHT SAVING END MONTH - P26E 1E (Value 1-12)

DAYLIGHT SAVING START HOUR - P26E 1E (Value 0-23)
DAYLIGHT SAVING END HOUR - P26E 1E (Value 0-23)

If Daylight Saving (DLS) is used, the actual start and stop details can be entered here and the clock will automatically adjust for daylight saving. If you put a value of “5” in for the “start” or “end” Sunday number the panel will check to see if the Sunday is the last Sunday in the month (required for Daylight Savings for Europe).

+++++Outputs+++++

NOTE: With all output programming options we refer to outputs 1-8. Only outputs 1-4 are available as standard, with outputs 5-8 requiring the connection of the optional 4 way output expander unit that connects to the keypad buss (the output expander provides 4 change-over relay contacts).

OUTPUT OPTIONS "A"

OUTPUT OPTIONS "A" - P34E 1-8E
Option 1 - Invert Output
Option 2 - Flash Output
Option 3 - Single Pulse to Output
Option 4 - Lockout Output
Option 5 - DTMF Remote Control of Output
Option 6 - Keypad User can Operate Output
Option 7 - <CONTROL> button can Operate Output
Option 8 - Pulsed Chime Alarm (linked to pulse timer)

Option 1 **Invert Output** - This option is used to invert the normal state of the output. The panel uses open collector transistor switches and the default state of all outputs is off (open). When in alarm the transistor is turned on and the output goes low (0V). The invert option reverses this function.

Option 2 **Flash Output** - When the output is turned on this option causes the output to flash at a rate set by the pulse timer (P39E). One use is to flash a lamp during an alarm. DO NOT turn this option on if the Output is to be manually controlled by a user or the "Control" button.

Option 3 **Single Pulse to Output** - This option produces a single pulse at the output when an alarm occurs (the pulse time is the value programmed at the output pulse timer P39E).

Option 4 **Lockout Output** - This option is used to limit the output to one operation per arming period.

Option 5 **DTMF Remote Control of Output -** If the panel is set-up so a User can dial in from a remote telephone to perform "DTMF Code Control" (P175E12E) of the Outputs, this option selects which Outputs are able to be controlled by the remote user.

Option 6 **Keypad User can Operate Output** - If a DTMF Output control code is programmed into the panel (P175E12E), the same code can be entered at the panel keypad to allow local control of the Outputs selected at this address.

Option 7 **<Control> button can Operate Output -** The <Control> button on the keypad can also be used to turn outputs on or off. For that to happen this option must be turned on for the output/s concerned. To turn an output on locally at the keypad the operator simply presses the <Control> button for 2 seconds at which time the "Control" LED will illuminate on an LED keypad or the word "OUTPUTS" will appear on the LCD keypad to indicate that the Control mode is active. If any controllable outputs are currently on they will be indicated at the keypad. The operator can now press a button relating to the output/s they wish to control eg pressing the "1" button will turn output 1 on or off, The "2" button for output 2 etc. When finished the operator then presses the <ENTER> button to cancel the Control mode and return to normal.

Option 8 **Pulsed Chime Mode Alarm** - Chime Zones programmed to this output will turn the output on for the duration of the Chime to Output time period (P41E). If this option is on the output will pulse at the pulse timer rate (P39E) for the duration of the chime zone to output timer (P41E).

OUTPUT OPTIONS "B"

OUTPUT OPTIONS "B" - P35E 1-8E
Option 1 - Mains Fail to Output
Option 2 - Fuse Failure to Output
Option 3 - Battery Low to Output
Option 4 - Telephone Line Failure to Output
Option 5 - Supervisory Radio Failure to Output
Option 6 - Sensor-Watch Alarm to Output
Option 7 - System Tamper to Output

Option 8 - Receiver Fail to Output

Option 1 **Mains Fail to Output** - This option is used to assign a Mains Fail alarm to an Output.

Option 2 **Fuse Failure to Output** - This option is used to assign a Fuse Failure alarm to an Output. The on-board fuses are thermally activated. If excessive current is drawn from a fuse it will disconnect the power until the problem is resolved. There are two thermal fuses protecting the various 12v DC outputs.

Option 3 **Battery Low to Outpu**t - This option is used to assign a Battery Low alarm to an Output.

Option 4 **Telephone Line Failure to Output** - This option is used to assign a Telephone Line Failure alarm to an Output.

Option 5 **Supervisory Radio failure to Output** - This option is used to assign a Radio Detector Supervisory Fail alarm to an Output.

Option 6 **Sensor-Watch Alarm to Output** - This option is used to assign a Sensor-Watch alarm to an Output. A Sensor-Watch alarm occurs when a detector has not operated within a set period of time.

Option 7 **System Tamper to Output** - This option is used to assign a panel tamper alarm to an Output.

Option 8 **Receiver Fail to Output** - If the receiver fail timer expires (see P25E7E) this option will assign the alarm to an Output.

OUTPUT OPTIONS "C"

OUTPUT OPTIONS "C" - P36E 1-8E
Option 1 - Walk-test Pulse to Output
Option 2 - Pulse Output every 5 seconds when Disarmed
Option 3 - Pulse Output on Kiss-off Following Arming

Option 1 **Walk-test Pulse to Outpu**t - When the panel is in Walk-test Mode, this option assigns a pulse to the Output every time a zone is triggered. The pulse is linked to the Output Pulse time (P39E).

Option 2 **Pulse Output every 5 seconds when Disarmed** - This option will cause the Output to pulse every 5 seconds when the panel is disarmed. The pulse time is linked to the Output Pulse time (P39E).

Option 3 **Pulse Output on Kiss-off Following Arming** - This option will cause the Output to pulse for 2 seconds when the panel is armed and the message has been kissed off by the monitoring company. The pulse time is linked to the Output Pulse time (P39E) which is defaulted to 2 seconds.

OUTPUT OPTIONS "D"

OUTPUT OPTIONS "D" - P37E 1-8E
Option 1 - Siren Driver to Output (applies to O/P 1&2 only, requires an 8Ω speaker)
Option 2 - Output Reset Time is in Minutes
Option 3 - Output "Silenced" for 10 seconds on key-press
Option 4 - Spare
Option 5 - Spare
Option 6 - Spare
Option 7 - Spare
Option 8 - Output Monitored (applies to O/P 1&2 only)

Option 1 **Siren Driver to Output** - This option is used to assign a Modulated Siren tone to an Output. The option only applies to Outputs 1 and 2. For the modulated siren tone to work correctly, an 8Ω speaker must be connected to the output concerned. Outputs 1 and 2 have different sounds so that a user can tell which output is operating.

Option 2 **Output Reset Time is in Minutes** - The Output reset time (P40E) is normally in seconds. This means that the Output timing can be set from 1-9999 seconds (approximately 2.8 hours). If a longer time period is required, by turning this option on the reset time is calculated in minutes (eg 1-9999 minutes allowing up to 166.65 hours).

Option 3 **Output "Silenced" for 10 seconds on key-press** - When the alarm is Armed and activated it can be difficult sometimes to turn the alarm off because you are unable to hear the beeps as you enter

you code at the keypad. If this option is turned on the selected output/s will silence (turn off) for 10 seconds on the first button press at any keypad. This should allow easy Disarming of the alarm by a valid User. If the alarm is not turned off within the 10 seconds, the outputs will turn on again. This function will only work once during an Armed cycle and the panel must be Disarmed before it will work again.

Option 8 **Output Monitored** - This option is used to allow Monitoring of the Output status (eg wire to siren has been cut). The option only applies to Outputs 1 and 2.

OUTPUT ON DELAY TIME

OUTPUT ON DELAY TIME - P38E 1-8E (0-9999 Seconds, 0 = no delay)

The "On" delay allows the operation of the Output to be delayed by the time programmed at this location. If set to "0" there will be no on delay and the Output will operate the instant it is turned on.

OUTPUT PULSE TIME

OUTPUT PULSE TIME - P39E 1-8E (0-255 1/10th Seconds, eg 20 = 2 secs)

The Pulse time affects the time the output turns on when the pulse timer is used on the Output. The pulse time is in 1/10th second increments so that very quick timing can be achieved. Functions like radio key Arm/Disarm Chirps to an Output or a flashing output (P34E option 2) all use the pulse timer. If access tags are assigned with the chirp function (P46E4E) and the LED on an access reader is set to follow an output with the chirps assigned (P98E) then this timer must be set to a minimum value of 10 for the reader LED to display the chirps.

OUTPUT RESET TIME

OUTPUT RESET TIME - P40E 1-8E (0-9999 Seconds, 0 = latched output)

The Reset time affects the time the output turns on when an alarm is active. The default range is 0-9999 seconds but if option 2 at location P37E is on the range is 0-9999 minutes.

CHIME MODE TIME

CHIME MODE TIME - P41E 1-8E (0-255 1/10th Seconds, eg 20 = 2 secs)

The Chime Mode time affects the time the output turns on when a Chime Zone is activated. The Chime time is in 1/10th second increments so that very quick timing can be achieved.

START OF "DTMF OUTPUT CONTROL" STATUS MESSAGES

START OF "DTMF OUTPUT CONTROL" STATUS MESSAGES - P42E 1-8E (0-99)

If a Voice Board is connected to the panel it is possible to dial the panel from a remote telephone and turn outputs On or Off using a 4 digit code with voice prompts provided by the Voice Board to identify what function you are controlling. Please see Voice Board programming on Page 8 for more details.

UN-MAP OUTPUTS

UN-MAP OUTPUTS - P43E 1-8E

If you are using an Output for a special purpose and do not need the standard defaults assigned to that output you can remove all defaults at this location. For example if you are using output number 4 to open a door via a Radio Key and you don't want any alarms to be assigned to the output press P43E4E and ALL defaults will be removed. This removes all options assigned to the output and makes the reset time "0" for latched operation.

ASSIGNING A TIME-ZONE to an OUTPUT

ASSIGN A TIME-ZONE TO OUTPUTS - P44E 1-8E (O/P#) Value = Time-zone 1-8

Any of the 8 Time-zones can be assigned to outputs 1-8. If a time-zone is assigned to an output it will turn the

output on when the T/Z starts and turn the output off when the T/Z ends. You should un-map the output at P43E first before assigning the T/Z to ensure that only the T/Z will control the state of the output.

+++++Areas+++++

AREA OPTIONS "A"

AREA OPTIONS "A" - P45E 1-2E (1 = Area A, 2 = Area B)

Option 1 - <ARM> button Required Before Code to Arm
Option 2 - <STAY> button Required Before code to Arm Stay Mode
Option 3 - <CODE> Required to Arm
Option 4 - <CODE> Required to Bypass
Option 5 - Spare
Option 6 - Report Arm Signal at the end of the Exit Delay
Option 7 - Can Arm only if All Zones Sealed (Ready)
Option 8 - Can Arm Stay Mode only if All Zones Sealed (Ready)

Option 1 **<ARM> button Required Before Code to Arm** - This option determines if the <ARM> button must be pressed before a code is entered to Arm an Area. If a User has access to both Areas and this option is turned on, the special keypad arming functions described on Page 32 will apply. This option does not apply to Prox/PIN readers or Stay mode keypads.

Option 2 **<STAY> button Required Before Code to Arm Stay Mode** - This option determines if the <STAY> button must be pressed before a code is entered to Arm Stay Mode. If a User has access to both Areas and this option is turned on, the special keypad arming functions described on Page 32 will apply. This option does not apply to Prox/PIN readers or Stay mode keypads.

Option 3 **<CODE> Required to Arm** - If this option is turned on, the <ARM> button is disabled and the panel requires a code to Arm.

Option 4 **<CODE> Required to Bypass** - If this option is turned on, the <BYPASS> button cannot access Bypass Mode directly. To enter Bypass mode the User must press <BYPASS> <CODE> <ENTER> before they can bypass zones.

Option 5 **Spare**

Option 6 **Report Arm Signal at the end of the Exit Delay** - If this option is on the panel will report the Arm signal to a monitoring station when the exit delay expires. If it is off, the panel will report the arm signal immediately the system has been armed.

Option 7 **Can Arm only if All Zones Sealed (Ready) -** If this option is on it stops the panel from arming an area with an unsealed zone (Not Ready). If off, the panel can be armed if the Ready LED is not on.

Option 8 **Can Arm Stay Mode only if All Zones Sealed (Ready) -** If this option is on it stops the panel from arming stay mode if an area has an unsealed zone (Not Ready). If off, the panel can be arm stay mode if the Ready LED is not on.

AREA OPTIONS "B"

AREA OPTIONS "B" - P46E 1-2E (1 = Area A, 2 = Area B)

Option 1 - Use Near and Verified Alarm reporting for All zones in this Area (CID ONLY)
Option 2 - Area will Arm at the end of Time-Zone
Option 3 - Area will Disarm at the end of Time-Zone
Option 4 - Assign Chirps to Access tags
Option 5 - Spare
Option 6 - Spare
Option 7 - Spare
Option 8 - Spare

Option 1 **Use Near and Verified Alarm reporting for All zones in this Area** - To reduce the possibility of false alarms the panel can require two alarms on different zones within a 45 minute period before a

full alarm will be sent. If this option is turned on it applies to all zones assigned to that area. An alarm on a single zone will send a CID (Contact ID) Near Alarm report to the monitoring station. If no further alarms occur within 45 minutes (and the zone that activated is sealed) the near alarm timer is reset and a restore is sent for the zone that activated. If the zone that activated is still unsealed when the 45 minute timer expires, a zone bypass for that zone will be sent and the zone will remain bypassed until the area is disarmed. Any new alarms after the timer has expired will send another Near Alarm report. If a second alarm on a different zone occurs within 45 minutes of the Near alarm, an Intrusion Verified alarm report will be sent. This format only applies to Contact ID and Pager reporting. Turning this option on will stop zone alarms from being reported in Domestic & Voice formats as there are no messages for near and confirmed alarms. You must turn this option off if using Domestic or Voice formats.

Option 2 **Area will Arm at the end of Time-Zone** - The panel is capable of automatically arming on a Time-Zone. If this option is turned on and a Time-Zone is selected at P68E, the Area will automatically arm when the Time-Zone ends. If the panel cannot arm because it is not “Ready”, a fail to arm report will be sent.

Option 3 **Area will Disarm at the end of Time-Zone** - The panel is capable of automatically disarming on a Time-Zone. If this option is turned on and a Time-Zone is selected at P68E, the Area will automatically disarm when the Time-Zone starts.

Option 4 **Assign Chirps to Access Tags** - If the panel is being Armed or Disarmed by an Access Tag/Card from a proximity reader it is possible to link the pendant chirps programming (P50E-P53E) to Arming or Disarming via the Access Tag or Card. If this option is On the chirps will apply to Access Tag/Cards. If the chirps are required to be displayed at the reader LED, the minimum pulse timer for the output (P39E) must be a value of 10.

AREA ARM INDICATION to OUTPUT

AREA ARM INDICATION to OUTPUT - P47E 1-2E (1 = Area A, 2 = Area B)

Option 1 - Output 1
Option 2 - Output 2
Option 3 - Output 3
Option 4 - Output 4
Option 5 - Output 5
Option 6 - Output 6
Option 6 - Output 7
Option 7 - Output 8

For monitoring purposes an Arm indication can be assigned to an Output. Each Area can have a separate arm indication assigned to a different output if required.

AREA STAY ARM INDICATION to OUTPUT

AREA STAY ARM INDICATION to OUTPUT - P48E 1-2E (1 = Area A, 2 = Area B)

Option 1 - Output 1
Option 2 - Output 2
Option 3 - Output 3
Option 4 - Output 4
Option 5 - Output 5
Option 6 - Output 6
Option 6 - Output 7
Option 7 - Output 8

For monitoring purposes a Stay Arm indication can be assigned to an Output. Each Area can have a separate indication assigned to a different output if required.

AREA DISARM INDICATION to OUTPUT

AREA DISARM INDICATION to OUTPUT - P49E 1-2E (1 = Area A, 2 = Area B)

Option 1 - Output 1
Option 2 - Output 2
Option 3 - Output 3
Option 4 - Output 4
Option 5 - Output 5
Option 6 - Output 6
Option 6 - Output 7
Option 7 - Output 8

For monitoring purposes a Disarm indication can be assigned to an Output. Each Area can have a separate disarm indication assigned to a different output if required.

PENDANT ARM CHIRP to OUTPUT

PENDANT ARM CHIRP to OUTPUT - P50E 1-2E (1 = Area A, 2 = Area B)

Option 1 - Output 1
Option 2 - Output 2
Option 5 - Output 5
Option 6 - Output 6

Option 3 - Output 3
Option 4 - Output 4
Option 6 - Output 7
Option 7 - Output 8

When Arming the alarm using a Radio Key it is necessary to have some form of Arm indication. This can done by pulsing an Output once when the area is armed (one chirp). The Chirp is linked to the pulse time (P39E) for the output concerned. If Output 1 or 2 are used for the chirp and a horn speaker is connected to the output (see P37E1 or 2E option 1), the siren on the output will give a single tone for the chirp instead of the swept tone used for alarms. Also Arming via an Access Tag/Card can generate the Chirp if option 4 is On at P47E.

PENDANT STAY MODE ARM CHIRP to OUTPUT

PENDANT STAY MODE ARM CHIRP to OUTPUT - P51E 1-2E (1 = Area A, 2 = Area B)

Option 1 - Output 1
Option 2 - Output 2
Option 3 - Output 3
Option 4 - Output 4
Option 5 - Output 5
Option 6 - Output 6
Option 6 - Output 7
Option 7 - Output 8

When Arming Stay Mode using a Radio Key it is necessary to have some form of Arm indication. This can done by pulsing an Output once when the area is armed (one chirp). The Chirp is linked to the pulse time (P39E) for the output concerned. If Output 1 or 2 are used for the chirp and a horn speaker is connected to the output (see P37E1 or 2E option 1), the siren on the output will give a single tone for the chirp instead of the swept tone used for alarms. Also Stay Arming via an Access Tag/Card can generate the Chirp if option 4 is On at P47E.

PENDANT DISARM CHIRP to OUTPUT

PENDANT DISARM CHIRP to OUTPUT - P52E 1-2E (1 = Area A, 2 = Area B)

Option 1 - Output 1
Option 2 - Output 2
Option 3 - Output 3
Option 4 - Output 4
Option 5 - Output 5
Option 6 - Output 6
Option 6 - Output 7
Option 7 - Output 8

When Disarming the alarm using a Radio Key it is necessary to have some form of Disarm indication. This can done by pulsing an Output twice when the area is disarmed (two chirps). The Chirps are linked to the pulse time (P39E) for the output concerned. If Output 1 or 2 are used for the chirp and a horn speaker is connected to the output (see P37E1 or 2E option 1), the siren on the output will give a single tone for the chirp instead of the swept tone used for alarms. Also Disarming via an Access Tag/Card can generate the Chirp if option 4 is On at P47E.

PENDANT STAY MODE DISARM CHIRP to OUTPUT

PENDANT STAY MODE DISARM CHIRP to OUTPUT - P53E 1-2E (1 = Area A, 2 = Area B)

Option 1 - Output 1
Option 2 - Output 2
Option 3 - Output 3
Option 4 - Output 4
Option 5 - Output 5
Option 6 - Output 6
Option 6 - Output 7
Option 7 - Output 8

When Disarming Stay Mode using a Radio Key it is necessary to have some form of Disarm indication. This can done by pulsing an Output twice when the Stay Mode is disarmed (two chirps). The Chirps are linked to the pulse time (P39E) for the output concerned. If Output 1 or 2 are used for the chirp and a horn speaker is connected to the output (see P37E1 or 2E option 1), the siren on the output will give a single tone for the chirp instead of the swept tone used for alarms. Also Stay Mode Disarming via an Access Tag/Card can generate the Chirp if option 4 is On at P47E.

ARM PULSE to OUTPUT

ARM PULSE to OUTPUT - P54E 1-2E (1 = Area A, 2 = Area B)

Option 1 - Output 1
Option 2 - Output 2
Option 3 - Output 3
Option 4 - Output 4
Option 5 - Output 5
Option 6 - Output 6
Option 6 - Output 7
Option 7 - Output 8

Sometimes it is necessary to have a single pulse to indicate an Arm state. This could be used to start a video recorder or similar device. Each time an Area is armed, a single pulse will be applied to the output. The Pulse time (P39E) sets the length of the pulse .

STAY MODE ARM PULSE to OUTPUT

STAY MODE ARM PULSE to OUTPUT - P55E 1-2E (1 = Area A, 2 = Area B)

Option 1 - Output 1
Option 2 - Output 2
Option 3 - Output 3
Option 4 - Output 4
Option 5 - Output 5
Option 6 - Output 6
Option 6 - Output 7
Option 7 - Output 8

Sometimes it is necessary to have a single pulse to indicate that Stay Mode is Armed. This could be used to start a video recorder or similar device. Each time an Area Stay Mode is armed, a single pulse will be applied to the output. The Pulse time (P39E) sets the length of the pulse .

DISARM PULSE to OUTPUT

DISARM PULSE to OUTPUT - P56E 1-2E (1 = Area A, 2 = Area B)

Option 1 - Output 1
Option 2 - Output 2
Option 3 - Output 3
Option 4 - Output 4
Option 5 - Output 5
Option 6 - Output 6
Option 6 - Output 7
Option 7 - Output 8

Sometimes it is necessary to have a single pulse to indicate a Disarm state. This could be used to stop a video recorder or similar device. Each time an Area is disarmed, a single pulse will be applied to the output. The Pulse time (P39E) sets the length of the pulse.

STAY MODE DISARM PULSE to OUTPUT

STAY MODE DISARM PULSE to OUTPUT - P57E 1-2E (1 = Area A, 2 = Area B)

Option 1 - Output 1
Option 2 - Output 2
Option 3 - Output 3
Option 4 - Output 4
Option 5 - Output 5
Option 6 - Output 6
Option 6 - Output 7
Option 7 - Output 8

Sometimes it is necessary to have a single pulse to indicate a Disarm of Stay Mode. This could be used to stop a video recorder or similar device. Each time an Area Stay Mode is disarmed, a single pulse will be applied to the output. The Pulse time (P39E) sets the length of the pulse.

ARMED EXIT DELAY BEEPS TO KEYPAD

ARMED EXIT DELAY BEEPS TO KEYPAD - P58E 1-2E (1 = Area A, 2 = Area B)

Option 1 - Keypad 1
Option 2 - Keypad 2
Option 3 - Keypad 3
Option 4 - Keypad 4
Option 5 - Keypad 5
Option 6 - Keypad 6
Option 6 - Keypad 7
Option 7 - Keypad 8

When an Area is Armed it is useful to have the exit delay beeps occurring at the keypad to warn the User to exit the premises without delay. If the option is on at this address, that keypad will beep out the exit delay. The exit beeps occur at one second intervals until the last 5 seconds at which time they change to 1/2 second intervals to act as a warning that the delay is about to expire.

STAY MODE EXIT DELAY BEEPS TO KEYPAD

STAY MODE EXIT DELAY BEEPS TO KEYPAD - P59E 1-2E (1 = Area A, 2 = Area B)

Option 1 - Keypad 1
Option 2 - Keypad 2
Option 3 - Keypad 3
Option 4 - Keypad 4
Option 5 - Keypad 5
Option 6 - Keypad 6
Option 6 - Keypad 7
Option 7 - Keypad 8

When an Area is Armed in Stay Mode it is useful to have the exit delay beeps occurring at the keypad to warn the User to exit the premises without delay. If the option is on at this address, that keypad will beep out the exit delay. This option may be turned off for Stay Mode to make the keypad silent when arming at night time. The exit beeps occur at one second intervals until the last 5 seconds at which time they change to 1/2 second intervals to act as a warning that the delay is about to expire. When arming Stay Mode the exit and entry delays can be cancelled by

pressing the <ENTER> button following arming of Stay Mode. The next time Stay Mode is armed, if the <ENTER> button is not pressed, all programmed exit and entry delays will apply.

ARMED EXIT DELAY TIME

ARMED EXIT DELAY TIME - P60E 1-2E (1 = Area A, 2 = Area B) (Value 0-255 Seconds)

Each Area can have their own exit delay time. The delay can be programmed from 1-255 seconds in one second increments. If the exit delay is set to “0” the panel will be instantly armed.

STAY MODE EXIT DELAY TIME

STAY MODE EXIT DELAY TIME - P61E 1-2E (1 = Area A, 2 = Area B) (Value 0-255 Seconds)

Each Stay Mode Area can have their own exit delay time. The delay can be programmed from 1-255 seconds in one second increments. If the exit delay is set to “0” the panel will be instantly armed.

MONITORING ACCOUNT CODE NUMBER

MONITORING ACCOUNT CODE NUMBER - P62E 1-2E (1 = Area A, 2 = Area B) (Value 0000-FFFF)

When the dialler is reporting to a monitoring station there must be a unique account code programmed to identify the panel. There is an account code for each area. The account code is 4 digits. Each digit can be a number from 0-9 as well as the special characters B,C,D,E & F. The chart below shows how the special characters are entered.

LED KEYPAD BUTTON	LED KEYPAD INDICATION	LCD KEYPAD BUTTON	LCD KEYPAD CID & 4+2 INDICATIONS	LCD KEYPAD TELEPHONE INDICATIONS	CID & 4+2 SPECIAL CHARACTERS	TELEPHONE NUMBER SPECIAL FUNCTION
“BYPASS”	-	CONTROL & 0	-	DELETE #	DELETE #	DELETE #
“PANIC”	11	CONTROL & 2	B	#	“B”	“#”
“MEMORY”	12	CONTROL & 3	C	*	“C”	“*”
“CONTROL”	13	CONTROL & 4	D	-	“D”	“2.5 sec Pause”
“ARM”	14	CONTROL & 5	E	w	“E”	“Wait for 2nd Dial-tone”
“STAY”	15	CONTROL & 6	F	=	“F”	“5 sec Pause”

DTMF REMOTE CONTROL CODE NUMBER

DTMF REMOTE CODE NUMBER - P63E 1-2E (1 = Area A, 2 = Area B) (Value 1-4 digit code 0-9999)

The panel can be configured to allow remote Arm/Disarm of each Area via a remote telephone. The codes programmed at this address are the DTMF code that must be used when performing this function. When dialling the panel and it has answered the call, after waiting for the panel modem tones to stop you can enter in the 4 digit DTMF code and the current status will be given of the Area associated with the code entered. After that, if you press the “*” button on the telephone the status of the area will toggle eg if is was previously armed it will change to disarmed or vice versa. When finished you simply hang-up and 15 seconds later the panel will release the line.

START OF “DTMF ARM/DISARM” STATUS MESSAGES

START OF “DTMF ARM/DISARM” STATUS MESSAGES - P64E 1-2E (1 = Area A, 2 = Area B) (0-99)

If a Voice Board is connected to the panel it is possible to dial the panel from a remote telephone and Arm or Disarm each Area using a 4 digit code with voice prompts provided by the Voice Board to identify what Area you are controlling. Please see Voice Board programming on Page 8 for more details.

ARMED EXIT BEEPS to OUTPUT

ARMED EXIT BEEPS to OUTPUT - P65E 1-2E (1 = Area A, 2 = Area B)

Option 1 - Output 1
Option 2 - Output 2
Option 3 - Output 3
Option 4 - Output 4
Option 5 - Output 5
Option 6 - Output 6
Option 6 - Output 7
Option 7 - Output 8

Sometimes it can be useful to extend the exit beeps, that occur at a keypad, to be present on an audible device on the exit path. This option allows the exit beeps during arming to be assigned to any of the 8 outputs. The Pulse time (P39E) sets the length of each beep.

STAY MODE ARM EXIT BEEPS to OUTPUT

STAY MODE ARM EXIT BEEPS to OUTPUT - P66E 1-2E (1 = Area A, 2 = Area B)

Option 1 - Output 1
Option 2 - Output 2
Option 3 - Output 3
Option 4 - Output 4
Option 5 - Output 5
Option 6 - Output 6
Option 6 - Output 7
Option 7 - Output 8

Sometimes it can be useful to extend the exit beeps, that occur at a keypad, to be present on an audible device on the exit path. This option allows the exit beeps during the arming of stay mode to be assigned to any of the 8 outputs. The Pulse time (P39E) sets the length of each beep.

AREA DELINQUENCY DELAY

AREA DELINQUENCY DELAY - P67E 1-2E (1 = Area A, 2 = Area B) (Value 0-99 Days)

Each Area can have their own Delinquency time. The delinquency time monitors the arm/disarms of each Area. If an Area has not been armed within the set number of days a delinquency report will be sent. Each time an Area is armed the delinquency timer is reset. A value of “0” disables the delinquency monitoring.
NOTE: If the default value of “0” is changed at this location (eg a value of 10 is entered meaning 10 days), the next time the area is armed a delinquency restore message will be sent via the dialler (Event type 454) as a test that the function is operating.

AUTOMATIC ARM/DISARM TIMEZONE

AUTOMATIC ARM/DISARM TIMEZONE - P68E 1-2E (1 = Area A, 2 = Area B) (Value 1-8)

Option 1 - Time-Zone 1
Option 2 - Time-Zone 2
Option 3 - Time-Zone 3
Option 4 - Time-Zone 4
Option 5 - Time-Zone 5
Option 6 - Time-Zone 6
Option 6 - Time-Zone 7
Option 7 - Time-Zone 8

If Option 2 or 3 are turned on location P46E then the Area can be automatically armed or disarmed by a time-zone/s. You can assign more than one time-zone to each Area. If assigning multiple time-zones you should insure that they do not overlap as this could cause confusion. A Time-zone would typically be 0830-1700 Monday-Friday. An area will turn on when the Time-zone ends (eg 1700) and turn off when a Time-zone starts (eg 0830)

KEYPAD AREA ASSIGNMENT

KEYPAD AREA ASSIGNMENT - P71E 1-8E

Option 1 - Area “A”
Option 2 - Area “B”

Option 1 **Area “A”** - This option assigns Area A to keypads. If a keypad is assigned to only Area A it can only Arm or Disarm that area.

Option 2 **Area “B”** - This option assigns Area B to keypads. If a keypad is assigned to only Area B it can only Arm or Disarm that area.

KEYPAD BUTTON OPTIONS

KEYPAD BUTTON OPTIONS - P72E 1-8E

Option 1 - <CHIME> or <CONTROL><PROGRAM> button Enabled
Option 2 - <BYPASS> button Enabled
Option 3 - <PANIC> button Enabled
Option 4 - Delayed Operation of <PANIC> button
Option 5 - <1> + <3> or <CONTROL> + <CHIME> Panic Alarm Enabled
Option 6 - <4> + <6> or <A> + <B> Fire Alarm Enabled
Option 7 - <7> + <9> or <B> + <CHIME> Medical Alarm Enabled
Option 8 - Spare

Option 1 **<CHIME> or <CONTROL><PROGRAM> button Enabled** - This option enables the <CHIME> button on the Crow LCD keypads or the <CONTROL> followed by the <PROGRAM> button on the LED and AAP LCD keypads. Chime alarms to the keypad buzzer and outputs are disabled when “Chime” is off. If a zone is programmed as a Chime Zone, it can beep the buzzer on a keypad and/or turn on an output as well to give a local “CHIME” indication. A typical use of “Chime” Mode is as a door minder in a shop. Sometimes it may be desirable to disable Chime mode without the need to reprogram the panel. This can be achieved by allowing Chime Mode to be disabled with the <CHIME> button on a Crow LCD keypad, or by using the <CONTROL> and <PROGRAM> buttons on an LED or AAP LCD keypad. If you press the <CHIME> button on a Crow LCD keypad for 2 seconds (and this option is turned on for that keypad) the display will show “Chime Mode OFF”. This means that the buzzer will now not sound at the keypad concerned and any Chime Mode Outputs will not activate. Pressing the <CHIME> button again for 2 seconds will toggle chime mode back to on again. If using an LED or AAP LCD keypad (which do not have a dedicated chime button), you simply press and hold the <CONTROL> Button and within 2 seconds then press the <PROGRAM> button to toggle chime mode. The AAP LCD keypad will show “Chime Mode OFF’ and the LED keypad will turn on the “AUX(0)” Led to show that chime mode is off. Performing the process again will toggle chime mode back to the on state again.

Option 2 **<BYPASS> button Enabled** - This option enables the <BYPASS> button (by keypad number) on any keypads connected to the panel .

Option 3 **<PANIC> button Enabled** - This option enables the <PANIC> button (by keypad number) on the LED or AAP LCD keypads connected to the panel .

Option 4 **Delayed Operation of <PANIC> button** - This option assigns a 2 second delay before the <PANIC> button will cause an alarm. The button must be held down for longer than 2 seconds to create a panic alarm.

Option 5 **<1> + <3> or CCONTROL> + <CHIME> Panic Alarm Enabled** - This option enables a Panic Alarm to be created when buttons <1> + <3> are pressed simultaneously on the LED or AAP LCD keypads. It also enables the <CHIME> + <CONTROL> Panic Alarm when both buttons are pressing simultaneously on a Crow LCD keypad.

Option 6 **<4> + <6> or <A> + <B> Fire Alarm Enabled** - This option enables a Fire Alarm to be created when

buttons <4> + <6> are pressed simultaneously on the LED or AAP LCD keypads. It also enables the <A> + <B> Fire Alarm when both buttons are pressing simultaneously on a Crow LCD keypad.

Option 7 **<7> + <9> or <B> + <CHIME> Medical Alarm Enabled** - This option enables a Medical Alarm to be created when buttons <7> + <9> are pressed simultaneously on the LED or AAP LCD keypads. It also enables the <B> + <CHIME> Medical Alarm when both buttons are pressing simultaneously on a Crow LCD keypad.

Option 8 **Spare** -

KEYPAD SYSTEM BEEPS & LED OPTIONS

KEYPAD SYSTEM BEEPS & LED OPTIONS - P73E 1-8E

Option 1 - Mains Fail Beeps Keypad Buzzer
Option 2 - Fuse Fail Beeps Keypad Buzzer
Option 3 - Battery Low Beeps Keypad Buzzer
Option 4 - Telephone Line Fail Beeps Keypad Buzzer
Option 5 - System Tamper Beeps Keypad Buzzer
Option 6 - Receiver Fail Beeps Keypad Buzzer
Option 7 - Turn Off Keypad LED's when Armed
Option 8 - Turn Off Keypad LCD & Keypad Backlighting on Mains Fail

Option 1 **Mains Fail Beeps Keypad Buzzer** - If this option is on a Mains Failure will cause the keypad buzzer to sound continuously. The continuous beep will automatically clear when the Mains returns to normal or it can be silenced by pressing the <ENTER> button on the keypad.

Option 2 **Fuse Fail Beeps Keypad Buzzer** - If this option is on a Fuse Failure (12v DC output short) will cause the keypad buzzer to sound continuously. The continuous beep will automatically clear when the short is removed and the fuse returns to normal or it can be silenced by pressing the <ENTER> button on the keypad.

Option 3 **Battery Low Beeps Keypad Buzzer** - If this option is on a Panel Battery Low will cause the keypad buzzer to sound continuously. The continuous beep will automatically clear when the battery returns to normal or it can be silenced by pressing the <ENTER> button on the keypad.

Option 4 **Telephone Line Fail Beeps Keypad Buzzer** - If this option is on a Telephone Line Failure will cause the keypad buzzer to sound continuously. The continuous beep will automatically clear when the Telephone Line returns to normal or it can be silenced by pressing the <ENTER> button on the keypad.

Option 5 **System Tamper Beeps Keypad Buzzer** - If this option is on a Panel Tamper Alarm will cause the keypad buzzer to sound continuously. The Alarm must then be cleared by entering in a valid code at the keypad.

Option 6 **Receiver Fail Beeps Keypad Buzzer** - If this option is on a Receiver Failure will cause the keypad buzzer to sound continuously. The continuous beep will automatically clear when the Receiver starts to see transmissions again or it can be silenced by pressing the <ENTER> button on the keypad.

Option 7 **Turn Off Keypad LED's when Armed** - This option allows the LED's on a keypad to be turned off when the panel is in the Armed state. It is normally used to cut the illumination from a keypad at night time. The LED's will return to the normal state on disarming of the alarm. The LED's will turn off within 90 seconds of arming the system.

Option 8 **Turn Off Keypad LCD & Keypad Backlighting on Mains Fail** - This option allows the backlighting on an LCD on a keypad (both the keypad buttons and the LCD module backlighting) to be turned off when there is a Mains Failure. It is normally used to cut the power consumed by the keypad during a power failure. The LCD backlighting will turn off within 90 seconds of the mains failing. If a button is pressed at the keypad the backlighting will turn back on again. Following 90 seconds of no keypad activity the backlighting will turn off. The LCD backlighting will return to the normal state when Mains is restored.

KEYPAD <ARM> BUTTON AREA ASSIGNMENT

KEYPAD <ARM> BUTTON AREA ASSIGNMENT - P74E 1-8E

Option 1 - Area “A”
Option 2 - Area “B”

Option 1 **Area “A”** - This option assigns the keypad <ARM> button to Area A. If a keypad <ARM> button is assigned to only Area A it can only Arm or Disarm that area.

Option 2 **Area “B”** - This option assigns the keypad <ARM> button to Area B. If a keypad <ARM> button is assigned to only Area B it can only Arm or Disarm that area.

KEYPAD <ARM> BUTTON AREA OPTIONS

KEYPAD <ARM> BUTTON AREA OPTIONS - P75E 1-8E

Option 1 - <ARM> button can Arm
Option 2 - <ARM> button can Arm Stay Mode
Option 3 - <ARM> button can Disarm at All Times
Option 4 - <ARM> button can Disarm Stay Mode at All Times
Option 5 - <ARM> button can Reset Alarms
Option 6 - <ARM> button can Arm Latchkey Mode
Option 7 - <ARM> button can Disarm During Exit Delay
Option 8 - <ARM> button can Disarm Stay Mode During Exit Delay

Option 1 **<ARM> button can Arm** - This option enables single button Arming using the <ARM> button. For single button operation to work options 1 & 3 must be off at location P46E.

Option 2 **<ARM> button can Arm Stay Mode** - This option enables single button Arming of Stay Mode using the <ARM> button. For single button operation to work options 1 & 3 must be off at location P46E.
(NOTE: Following arming of Stay Mode, if the <ENTER> button is pressed, all entry & exit delays will be reset to zero for that armed period).

Option 3 **<ARM> button can Disarm at All Times** - This option enables single button Disarming using the <ARM> button. For single button disarm operation to work options 1 & 3 must be off at location P46E

Option 4 **<ARM> button can Disarm Stay Mode at All Times** - This option enables single button Disarming of Stay Mode using the <ARM> button. For single button disarm operation to work options 1 & 3 must be off at location P46E

Option 5 **<ARM> button can Reset Alarms** - If this option is On, Pressing the <ARM> button (provided Option 3 is also On) will reset an alarm condition without having to enter a user code.

Option 6 **<ARM> button can Arm Latchkey Mode** - This option enables single button Arming of the alarm in Latchkey report mode using the <ARM> button. For single button disarm operation to work options 1 & 3 must be off at location P45E. When Latchkey Mode is set on Arming, any code without the Latchkey option (P4E Option 6) used to Disarm the Alarm will cause a Disarm report to be sent via the dialler.

Option 7 **<ARM> button can Disarm During Exit Delay** - This option allows single button Disarming using the <ARM> button provided the Armed Mode exit delay is active. If the exit delay has expired the <ARM> button cannot be used to disarm the alarm. For single button disarm operation to work options 1 & 3 must be off at location P46E

Option 8 **<ARM> button can Disarm Stay Mode During Exit Delay** - This option allows single button Disarming of Stay Mode using the <ARM> button provided the Stay Mode exit delay is active. If the Stay Mode exit delay has expired the <ARM> button cannot be used to disarm Stay Mode. For single button disarm operation to work options 1 & 3 must be off at location P46E

KEYPAD <STAY> BUTTON AREA ASSIGNMENT

KEYPAD <STAY> BUTTON AREA ASSIGNMENT - P76E 1-8E

Option 1 - Area “A”
Option 2 - Area “B”

Option 1 **Area "A"** - This option assigns the keypad <STAY> button to Area A. If a keypad <STAY> button is assigned to only Area A it can only Arm or Disarm that area.

Option 1 **Area "B"** - This option assigns the keypad <STAY> button to Area B. If a keypad <STAY> button is assigned to only Area B it can only Arm or Disarm that area.

KEYPAD <STAY> BUTTON AREA OPTIONS

KEYPAD <STAY> BUTTON AREA OPTIONS - P77E 1-8E

Option 1 - <STAY> button can Arm
Option 2 - <STAY> button can Arm Stay Mode
Option 3 - <STAY> button can Disarm at All Times
Option 4 - <STAY> button can Disarm Stay Mode at All Times
Option 5 - <STAY> button can Reset Alarms
Option 6 - <STAY> button can Arm Latchkey Mode
Option 7 - <STAY> button can Disarm During Exit Delay
Option 8 - <STAY> button can Disarm Stay Mode During Exit Delay

Option 1 **<STAY> button can Arm** - This option enables single button Arming using the <STAY> button. For single button operation to work options 2 & 3 must be off at location P46E.

Option 2 **<STAY> button can Arm Stay Mode** - This option enables single button Arming of Stay Mode using the <STAY> button. For single button operation to work options 2 & 3 must be off at location P46E.
(NOTE: Following arming of Stay Mode, if the <ENTER> button is pressed, all entry & exit delays will be reset to zero for that armed period).

Option 3 **<STAY> button can Disarm at All Times** - This option enables single button Disarming using the <STAY> button. For single button disarm operation to work options 2 & 3 must be off at location P46E

Option 4 **<STAY> button can Disarm Stay Mode at All Times** - This option enables single button Disarming of Stay Mode using the <STAY> button. For single button disarm operation to work options 2 & 3 must be off at location P46E

Option 5 **<STAY> button can Reset Alarms** - If this option is On, Pressing the <STAY> button (provided Option 4 is also On) will reset an alarm condition without having to enter a user code.

Option 6 **<STAY> button can Arm Latchkey Mode** - This option enables single button Arming of the alarm in Latchkey report mode using the <STAY> button. For single button disarm operation to work options 2 & 3 must be off at location P45E. When Latchkey Mode is set on Arming, any code without the Latchkey option (P4E Option 6) used to Disarm the Alarm will cause a Disarm report to be sent via the dialler.

Option 7 **<STAY> button can Disarm During Exit Delay** - This option allows single button Disarming using the <STAY> button provided the Armed Mode exit delay is active. If the exit delay has expired the <STAY> button cannot be used to disarm the alarm. For single button disarm operation to work options 2 & 3 must be off at location P46E

Option 8 **<STAY> button can Disarm Stay Mode During Exit Delay** - This option allows single button Disarming of Stay Mode using the <STAY> button provided the Stay Mode exit delay is active. If the Stay Mode exit delay has expired the <STAY> button cannot be used to disarm Stay Mode. For single button disarm operation to work options 2 & 3 must be off at location P46E

KEYPAD <A> BUTTON AREA ASSIGNMENT

KEYPAD <A> BUTTON AREA ASSIGNMENT - P78E 1-8E (APPLIES TO CROW LCD KEYPAD ONLY)

Option 1 - Area "A"
Option 2 - Area "B"

Option 1 **Area "A"** - This option assigns the keypad <A> button to Area A. If a keypad <A> button is assigned to only Area A it can only Arm or Disarm that area.

Option 1 **Area "B"** - This option assigns the keypad <A> button to Area B. If a keypad <A> button is assigned to only Area B it can only Arm or Disarm that area.

KEYPAD <A> BUTTON AREA OPTIONS

KEYPAD <A> BUTTON AREA OPTIONS - P79E 1-8E (APPLIES TO CROW LCD KEYPAD ONLY)

Option 1 - <A> button can Arm
Option 2 - <A> button can Arm Stay Mode
Option 3 - <A> button can Disarm at All Times
Option 4 - <A> button can Disarm Stay Mode at All Times
Option 5 - <A> button can Reset Alarms
Option 6 - <A> button can Arm Latchkey Mode
Option 7 - <A> button can Disarm During Exit Delay
Option 8 - <A> button can Disarm Stay Mode During Exit Delay

Option 1 **<A> button can Arm** - This option enables single button Arming using the <A> button. For single button operation to work options 2 & 3 must be off at location P46E.

Option 2 **<A> button can Arm Stay Mode** - This option enables single button Arming of Stay Mode using the <A> button. For single button operation to work options 2 & 3 must be off at location P46E.
(NOTE: Following arming of Stay Mode, if the <ENTER> button is pressed, all entry & exit delays will be reset to zero for that armed period).

Option 3 **<A> button can Disarm at All Times** - This option enables single button Disarming using the <A> button. For single button disarm operation to work options 2 & 3 must be off at location P46E

Option 4 **<A> button can Disarm Stay Mode at All Times** - This option enables single button Disarming of Stay Mode using the <A> button. For single button disarm operation to work options 2 & 3 must be off at location P46E

Option 5 **<A> button can Reset Alarms** - If this option is On, Pressing the <A> button (provided Option 3 is also On) will reset an alarm condition without having to enter a user code.

Option 6 **<A> button can Arm Latchkey Mode** - This option enables single button Arming of the alarm in Latchkey report mode using the <A> button. For single button Arm operation to work options 2 & 3 must be off at location P45E. When Latchkey Mode is set on Arming, any code without the Latchkey option (P4E Option 6) used to Disarm the Alarm will cause a Disarm report to be sent via the dialler.

Option 7 **<A> button can Disarm During Exit Delay** - This option allows single button Disarming using the <A> button provided the Armed Mode exit delay is active. If the exit delay has expired the <A> button cannot be used to disarm the alarm. For single button disarm operation to work options 2 & 3 must be off at location P46E

Option 8 **<A> button can Disarm Stay Mode During Exit Delay** - This option allows single button Disarming of Stay Mode using the <A> button provided the Stay Mode exit delay is active. If the Stay Mode exit delay has expired the <A> button cannot be used to disarm Stay Mode. For single button disarm operation to work options 2 & 3 must be off at location P46E

KEYPAD <B> BUTTON AREA ASSIGNMENT

KEYPAD <B> BUTTON AREA ASSIGNMENT - P80E 1-8E (APPLIES TO CROW LCD KEYPAD ONLY)

Option 1 - Area “A”
Option 2 - Area “B”

Option 1 **Area “A”** - This option assigns the keypad <B> button to Area A. If a keypad <B> button is assigned to only Area A it can only Arm or Disarm that area.

Option 1 **Area “B”** - This option assigns the keypad <B> button to Area B. If a keypad <B> button is assigned to only Area B it can only Arm or Disarm that area.

KEYPAD <B> BUTTON AREA OPTIONS

KEYPAD <B> BUTTON AREA OPTIONS - P81E 1-8E (APPLIES TO CROW LCD KEYPAD ONLY)

Option 1 - <B> button can Arm

Option 2 - <B> button can Arm A Mode
Option 3 - <B> button can Disarm at All Times
Option 4 - <B> button can Disarm Stay Mode at All Times
Option 5 - <B> button can Reset Alarms
Option 6 - <B> button can Arm Latchkey Mode
Option 7 - <B> button can Disarm During Exit Delay
Option 8 - <B> button can Disarm Stay Mode During Exit Delay

Option 1 **<B> button can Arm** - This option enables single button Arming using the <B> button. For single button operation to work options 2 & 3 must be off at location P46E.

Option 2 **<B> button can Arm Stay Mode** - This option enables single button Arming of Stay Mode using the <B> button. For single button operation to work options 2 & 3 must be off at location P46E.
(NOTE: Following arming of Stay Mode, if the <ENTER> button is pressed, all entry & exit delays will be reset to zero for that armed period).

Option 3 **<B> button can Disarm at All Times** - This option enables single button Disarming using the <B> button. For single button disarm operation to work options 2 & 3 must be off at location P46E

Option 4 **<B> button can Disarm Stay Mode at All Times** - This option enables single button Disarming of Stay Mode using the <B> button. For single button disarm operation to work options 2 & 3 must be off at location P46E

Option 5 **<B> button can Reset Alarms** - If this option is On, Pressing the <B> button (provided Option 3 is also On) will reset an alarm condition without having to enter a user code.

Option 6 **<B> button can Arm Latchkey Mode** - This option enables single button Arming of the alarm in Latchkey report mode using the <B> button. For single button Arm operation to work options 2 & 3 must be off at location P45E. When Latchkey Mode is set on Arming, any code without the Latchkey option (P4E Option 6) used to Disarm the Alarm will cause a Disarm report to be sent via the dialler.

Option 7 **<B> button can Disarm During Exit Delay** - This option allows single button Disarming using the <B> button provided the Armed Mode exit delay is active. If the exit delay has expired the <B> button cannot be used to disarm the alarm. For single button disarm operation to work options 2 & 3 must be off at location P46E

Option 8 **<B> button can Disarm Stay Mode During Exit Delay** - This option allows single button Disarming of Stay Mode using the <B> button provided the Stay Mode exit delay is active. If the Stay Mode exit delay has expired the <B> button cannot be used to disarm Stay Mode. For single button disarm operation to work options 2 & 3 must be off at location P46E

KEYPAD to OUTPUT MASK

KEYPAD to OUTPUT MASK - P82E 1-8E

Option 1 - Output 1
Option 2 - Output 2
Option 3 - Output 3
Option 4 - Output 4
Option 5 - Output 5
Option 6 - Output 6
Option 6 - Output 7
Option 7 - Output 8

A Keypad can be assigned to an Output or multiple Outputs. If a Keypad is not assigned to an Output a User cannot turn that Output On or Off from the Keypad. This feature is useful when using the access control features of the panel, eg a User may be allowed to operate more than one Output with their code but they will be limited to just the Output assigned to the Keypad they are using.

<CONTROL> BUTTON to OUTPUT MASK

<CONTROL> BUTTON to OUTPUT MASK - P83E 1-8E

Option 1 - Output 1
Option 2 - Output 2
Option 3 - Output 3
Option 4 - Output 4
Option 5 - Output 5
Option 6 - Output 6
Option 6 - Output 7
Option 7 - Output 8

The <CONTROL> button at a Keypad can be assigned to an Output or multiple Outputs. If the <CONTROL> button is not assigned to an Output a User cannot access Local Control Mode (by pressing the <CONTROL> button) and

turn that Output On or Off from the Keypad. This feature is useful if Outputs are being used to control devices such as lights, etc and you wish to be able to turn them On or Off from a keypad. By limiting the access to Outputs via the <CONTROL> button you can avoid conflict with alarm outputs (eg the User can be denied access to outputs that are being used for alarm functions).

KEYPAD PANIC ALARM to OUTPUT

KEYPAD PANIC ALARM to OUTPUT - P84E 1-8E (includes <PANIC>, <1> & <3> or <CONTROL> & <CHIME>)

Option 1 - Output 1
Option 2 - Output 2
Option 3 - Output 3
Option 4 - Output 4
Option 5 - Output 5
Option 6 - Output 6
Option 6 - Output 7
Option 7 - Output 8

A Keypad generated Panic Alarm (either pressing the <PANIC> button, <1> & <3> or <CONTROL> & <CHIME> together) can be assigned to an Output or multiple Outputs. This can be used to operate an audible or visual alarm connected to the Output.

KEYPAD FIRE ALARM to OUTPUT

KEYPAD FIRE ALARM to OUTPUT - P85E 1-8E (includes <A> & <B> or <4> & <6>)

Option 1 - Output 1
Option 2 - Output 2
Option 3 - Output 3
Option 4 - Output 4
Option 5 - Output 5
Option 6 - Output 6
Option 6 - Output 7
Option 7 - Output 8

A Keypad generated Fire Alarm (either pressing the <A> & <B> or <4> & <6> together) can be assigned to an Output or multiple Outputs. This can be used to operate an audible or visual alarm connected to the Output.

KEYPAD MEDICAL ALARM to OUTPUT

KEYPAD MEDICAL ALARM to OUTPUT - P86E 1-8E (includes <B> & <CHIME> or <7> & <9>)

Option 1 - Output 1
Option 2 - Output 2
Option 3 - Output 3
Option 4 - Output 4
Option 5 - Output 5
Option 6 - Output 6
Option 6 - Output 7
Option 7 - Output 8

A Keypad generated Medical Alarm (either pressing the <B> & <CHIME> or <7> & <9> together) can be assigned to an Output or multiple Outputs. This can be used to operate an audible or visual alarm connected to the Output.

KEYPAD DURESS ALARM to OUTPUT

KEYPAD DURESS ALARM to OUTPUT - P87E 1-8E

Option 1 - Output 1
Option 2 - Output 2
Option 3 - Output 3
Option 4 - Output 4
Option 5 - Output 5
Option 6 - Output 6
Option 6 - Output 7
Option 7 - Output 8

A Keypad generated Duress Alarm (see P25E2E) can be assigned to an Output or multiple Outputs. This can be used to operate an audible or visual alarm connected to the Output. A Duress alarm is created when the alarm is Disarmed with the Duress digit preceding a valid User Code.

KEYPAD TAMPER SWITCH ALARM to OUTPUT

KEYPAD TAMPER SWITCH ALARM to OUTPUT - P88E 1-8E

Option 1 - Output 1
Option 2 - Output 2
Option 3 - Output 3
Option 4 - Output 4
Option 5 - Output 5
Option 6 - Output 6
Option 6 - Output 7
Option 7 - Output 8

If the keypad has a Tamper Switch fitted and this switch is activated, the Tamper Alarm can be assigned to an Output or multiple Outputs. This can be used to operate an audible or visual alarm connected to the Output.

KEYPAD WRONG CODE ALARM to OUTPUT

KEYPAD WRONG CODE ALARM to OUTPUT - P89E 1-8E

Option 1 - Output 1
Option 2 - Output 2
Option 3 - Output 3
Option 4 - Output 4
Option 5 - Output 5
Option 6 - Output 6
Option 6 - Output 7
Option 7 - Output 8

If someone is attempting disarm the alarm by trying various code combinations and they enter in 4 wrong codes the panel will go into a “Wrong Code” tamper alarm. The Alarm can be assigned to an Output or multiple Outputs. This can be used to operate an audible or visual alarm connected to the Output. A correct code entry will reset the tamper alarm.

MANUAL PANIC ALARM BEEPS TO KEYPAD

MANUAL PANIC ALARM BEEPS TO KEYPAD - P90E 1-8E

Option 1 - Keypad 1
Option 2 - Keypad 2
Option 3 - Keypad 3
Option 4 - Keypad 4
Option 5 - Keypad 5
Option 6 - Keypad 6
Option 6 - Keypad 7
Option 7 - Keypad 8

When a keypad generated Panic Alarm is generated, the alarm can be silent or it can operate the buzzer in the keypad.

MANUAL FIRE ALARM BEEPS TO KEYPAD

MANUAL FIRE ALARM BEEPS TO KEYPAD - P91E 1-8E

Option 1 - Keypad 1
Option 2 - Keypad 2
Option 3 - Keypad 3
Option 4 - Keypad 4
Option 5 - Keypad 5
Option 6 - Keypad 6
Option 6 - Keypad 7
Option 7 - Keypad 8

When a keypad generated Fire Alarm is generated, the alarm can be silent or it can operate the buzzer in the keypad.

MANUAL MEDICAL ALARM BEEPS TO KEYPAD

MANUAL MEDICAL ALARM BEEPS TO KEYPAD - P92E 1-8E

Option 1 - Keypad 1
Option 2 - Keypad 2
Option 3 - Keypad 3
Option 4 - Keypad 4
Option 5 - Keypad 5
Option 6 - Keypad 6
Option 6 - Keypad 7
Option 7 - Keypad 8

When a keypad generated Medical Alarm is generated, the alarm can be silent or it can operate the buzzer in the keypad.

WRONG CODE or KEYPAD TAMPER BEEPS TO KEYPAD

WRONG CODE or KEYPAD TAMPER SWITCH ALARM BEEPS TO KEYPAD - P93E 1-8E

Option 1 - Keypad 1
Option 2 - Keypad 2
Option 3 - Keypad 3
Option 4 - Keypad 4
Option 5 - Keypad 5
Option 6 - Keypad 6
Option 6 - Keypad 7
Option 7 - Keypad 8

If someone enters in an incorrect code more than 4 times or a Keypad Tamper Switch Alarm is generated, the alarm can be silent or it can operate the buzzer in the keypad. The selected keypad, e.g. P93E1E for keypad number 1 is the one at which the alarm has occurred and the options 1-8 are the keypads that will beep in alarm.

CHIME ALARM KEYPAD BEEP TIME

CHIME ALARM KEYPAD BEEP TIME - P94E 1-8E (Value = 0-255 1/10th Second)

When a Chime Zone is activated it can operate an Output and/or beep the keypad buzzer. There is a separate Chime timer for each of the 8 keypads. If the value is made “0” for a keypad the Chime Zone will not beep the keypad buzzer. The Keypad Chime Timer can be set to a value from 1-255. The units are in 1/10th second increments. This means that a value of 10 will beep the keypad buzzer for 1 second.

PROXIMITY READER LED to OUTPUT MAPPING

PROXIMITY READER LED to OUTPUT MAPPING - P98E 1-8E

Option 1 - Proximity Reader 1-8 LED follows Output 1
Option 2 - Proximity Reader 1-8 LED follows Output 2
Option 3 - Proximity Reader 1-8 LED follows Output 3
Option 4 - Proximity Reader 1-8 LED follows Output 4
Option 5 - Proximity Reader 1-8 LED follows Output 5
Option 6 - Proximity Reader 1-8 LED follows Output 6
Option 6 - Proximity Reader 1-8 LED follows Output 7
Option 7 - Proximity Reader 1-8 LED follows Output 8

If a proximity reader is connected to the control panel it may be desirable to have the LED provide some form of indication such as Arm/Disarm state, etc. By using this location it is possible to link the LED at a reader number to follow the programming of an output. The LED can be used to indicate Arm/Disarm state, Stay Mode Arm/disarm, output On/Off, etc. If chirps have been assigned to access tags/cards (P46E4E) and the output the reader LED is set to follow has the chirps assigned (P50E-P53E), then the output must have a minimum pulse time (P39E) of 10 for it to work correctly.
The proximity reader keypad address number is set at P99E as detailed below.

LEARN PROXIMITY READER KEYPAD ADDRESS NUMBER

LEARN PROXIMITY READER KEYPAD ADDRESS NUMBER - P99E 1-8E (Value = Keypad Address 1-8)

When a Proximity reader is connected to the panel it must have a unique keypad address number assigned so that any program options can be assigned to that specific reader. To program the keypad address you must first connect the reader to the panel via the keypad buss. Then from installer program mode, enter in P99E followed by the keypad address you wish to assign to the reader (eg P99E4E will assign keypad address 4). To assign this keypad address to a selected reader you have to present a tag or card 5 times within 10 seconds to learn the keypad address number. The tag or card does not have to be enrolled at the panel to set the keypad address. When the address has been learnt by the reader it sends an acknowledgement back to the panel which will stop the learn mode. To assign a different address to another reader you must go through the same process again only this time entering in a different keypad address number (eg P99E5E for keypad address 5). Repeat the process until all readers have been assigned a unique keypad address. Now any keypad specific options can be assigned to the readers (eg assign areas/outputs or users to the reader).

If you do not assign a unique address to every keypad and reader connected to the keypad buss, a conflict will exist that will cause erratic operation. Each reader or keypad MUST have a different address.

NOTE: The proximity and arming readers flash out the assigned keypad address number on their LED whenever the panel is in “Installer Program” Mode. This allows quick identification of the assigned address for each reader.

+++++Key-switches+++++

The two Key-Switch inputs are available on the panel tamper. Normally the panel tamper is a single 2k2 EOL resistor, however if the tamper input is wired as per the type 14 option shown on page 5, the 4k7 resistor becomes Key-switch number 1 and the 8k2 resistor becomes Key-switch number 2 (the 2k2 still acts as the tamper resistor). If the tamper input is shorted out or cut the panel will still go into system tamper alarm but provided the 2k2 resistor is maintained then shorting or opening the 4k7 or 8k2 resistors will operate the key-switch functions.

KEY-SWITCH AREA ASSIGNMENT

KEY-SWITCH AREA ASSIGNMENT - P111E 1-2E (1 = Key-switch # 1, 2 = Key-switch # 2)

Option 1 - Area “A”
Option 2 - Area “B”

Option 1 **Area “A”** - This option assigns the key-switch to Area A. If a key-switch is assigned to only Area A it can only Arm or Disarm that area.

Option 2 **Area “B”** - This option assigns the key-switch to Area B. If a key-switch is assigned to only Area B it can only Arm or Disarm that area.

KEY-SWITCH ACCESS & OPERATIONAL OPTIONS

KEY-SWITCH ACCESS & OPERATIONAL OPTIONS - P112E 1-2E (1 = Key-switch # 1, 2 = Key-switch # 2)

Option 1 - Key-Switch can Arm
Option 2 - Key-Switch can Arm Stay Mode
Option 3 - Key-Switch can Disarm
Option 4 - Key-Switch can Disarm Stay Mode
Option 5 - Key-Switch has Security Guard Options
Option 6 - Key-Switch will Arm Latchkey Mode
Option 7 - Key-Switch is NO (Normally Open)
Option 8 - Key-Switch is Momentary

Option 1 **Key-Switch can Arm** - This option enables Arming of the assigned Area via the Key-switch.

Option 2 **Key-Switch can Arm Stay Mode** - This option enables Stay Mode Arming of the assigned Area via the Key-switch.

Option 3 **Key-Switch can Disarm** - This option enables Disarming of the assigned Area via the Key-switch.

Option 4 **Key-Switch can Disarm Stay Mode** - This option enables Stay Mode Disarming of the assigned Area via the Key-switch.

Option 5 **Key-Switch has Security Guard Options -** If the key-switch has option 5 on, they can Arm all Areas assigned, but they may only Disarm if the panel is currently Armed and in the alarm state.

Option 6 **Key-Switch will Arm Latchkey Mode** - If the panel is armed by a key-switch with this option on, then the panel will be armed in Latchkey mode. This means that when the alarm is disarmed by a key-switch with this option off, or a code with option 6 at P4E off, then a disarm report will be sent. The option is designed to alert the alarm owner when children have returned home and disarmed the alarm.

Option 7 **Key-Switch is NO (Normally Open)** - The key-switch can be a NO (Normally Open) or a NC (Normally Closed) key-switch. The normal, or rest state, of the key-switch can be programmed at this location. If the key-switch contacts usually rest in the open state and close when the key-switch is operated you should turn on option 7.

Option 8 **Key-Switch is Momentary** - The operation of the key-switch can be momentary or latching. If option 8 is on, the key-switch operation is assumed to be momentary. This means that each time the key-switch is operated then released the area will toggle its current state (ie if armed it will become disarmed or vice versa). If this option is turned off it is assumed that the key-switch is a latching type. This means that when the key-switch is operated and the key removed the contacts remain in the same state. When a latching key-switch is used, turning on the switch will arm the area and turning it off will disarm the area.

ZONE AREA ASSIGNMENT

ZONE AREA ASSIGNMENT - P121E 1-16E

Option 1 - Area “A”
Option 2 - Area “B”

Option 1 **Area “A”** - This option assigns the Zone to Area A. If a Zone is assigned only to Area A it will activate if Area A is armed. If the zone is in both area A & B then it will activate only when both areas are armed.

Option 2 **Area “B”** - This option assigns the Zone to Area B. If a Zone is assigned only to Area B it will activate if Area B is armed. If the zone is in both area A & B then it will activate only when both areas are armed.

ZONE OPTIONS A

ZONE OPTIONS A - P122E 1-16E

Option 1 - Zone is Active
Option 2 - Zone is N/O
Option 3 - Spare
Option 4 - Keypad Zone
Option 5 - Zone is a Radio Zone
Option 6 - Zone is a Stay Mode Zone
Option 7 - Zone can be Manually Bypassed
Option 8 - Zone can be Auto-Bypassed

Option 1 **Zone is Active** - If this option is on the zone is turned on. If it is turned off the zone will not be monitored by the panel. The panel can provide up to 16 zones but is configured by default as an 8 zone panel with this option turned off for zones 9-16.

Option 2 **Zone is N/O** - This option only applies if the zone input is set to type 14 (zone doubling) at location P125E. When configured as type 14 there are three resistors wired in series on the input, a 2k2 tamper resistor, a 4k7 low zone resistor and an 8k2 high zone resistor. At this point, the zone can be set as having a N/C (Normally closed) alarm contact where the EOL resistor is shorted out in the sealed state or it can be set as a N/O (Normally open) alarm contact where the EOL resistor is in circuit in the sealed state. If this option is turned on it assumes that the alarm contact is N/O.

Option 3 **Spare**

Option 4 **Keypad Zone** - If this option is on the Zone will follow the Input at the corresponding Proximity Reader. If the Proximity Reader is set to Keypad # 1 the input will be either zone 1 or zone 9, eg if P122E1E (zone #1) had option 4 on then the input at reader one will operate zone 1. If P122E9E (zone #9) had option 4 on then the input at reader one will operate zone 9. Proximity reader 1 can operate zones 1 or 9 through to proximity reader 8 can operate zones 8 or 16.

Option 5 **Zone is a Radio Zone** - If this option is on the panel does not scan the hardwired zone input terminal but instead is looking for a radio zone signal. The correct radio type should be set at location P127E to ensure that the radio zone works correctly.

Option 6 **Zone is a Stay Mode Zone** - If this option is on the zone will be active when Stay Mode is armed. This feature is normally used for arming just part of the alarm at night time.

Option 7 **Zone can be Manually Bypassed** - If this option is on the zone can be Manually Bypassed at the keypad using the <BYPASS> button. A zone must be Bypassed while in the disarmed state. A bypassed zone will also bypass any tampers associated with that zone. Once the area with the bypassed zone has been armed then disarmed, the manual bypass is removed and the zone must be manually bypassed again before arming if required. If a zone is configured as a 24 Hour zone (P123E Options 3,4 & 5), they can also Manually Bypassed but in this case the Bypass must be manually removed to re-instate the zone.

Option 8 **Zone can be Auto-Bypassed** - If this option is on the zone will be Auto-Bypassed if unsealed at the

expiry of the exit delay. If a zone is unsealed at the time of arming and remains unsealed when the exit delay expires and this option is on for that zone it will be automatically bypassed by the panel. If the zone seals after that time it will be re-instated automatically and can then cause an alarm. On disarming of the alarm any auto-Bypasses are removed.

ZONE OPTIONS B

ZONE OPTIONS B - P123E 1-16E

Option 1 - Zone is a Handover Zone
Option 2 - Zone is a Two Trigger Zone
Option 3 - Zone is a 24 Hour Zone
Option 4 - Zone is a 24 Hour Auto-reset Zone
Option 5 - Zone is a 24 Hour Fire Zone
Option 6 - Zone is a One-Shot Zone
Option 7 - Zone is a Chime Zone
Option 8 - Zone is a Permanent Chime Zone

Option 1 **Zone is a Handover Zone** - A Handover Zone is one that its entry delay will apply provided a Non-Handover entry zone is triggered first. If no other entry delay zones are triggered before the handover zone the entry delay on that zone does not apply and the alarm will become instant (no entry delay).

Option 2 **Zone is a Two Trigger Zone** - If this option is on the zone will have to trigger twice within the two trigger time (P25E5E) before it will cause an alarm. If the zone does not trigger a second time before the two trigger time expires, the count is reset and it will take another two triggers to cause an alarm on this zone. If more than one zone is set-up as a two trigger zone, then a single trigger from two separate zones within the two trigger time can also cause an alarm. If the zone becomes faulty and stays in alarm once triggered it will also cause an alarm provided it remains in alarm for longer than the two trigger time.

Option 3 **Zone is a 24 Hour Zone** - If this option is on the zone will be constantly monitored regardless of the arm/disarm state of the panel. If the 24 Hour zone also has an entry delay programmed (P144E), this delay will apply. If the 24 Hour zone activates but then resets before the entry delay expires no alarm will be generated. This feature can be useful for monitoring plant type alarms such as freezer alarms. Once the alarm has been generated it must be cleared by entry of a valid User code.

Option 4 **Zone is a 24 Hour Auto-reset Zone** - If this option is on the zone will be constantly monitored regardless of the arm/disarm state of the panel. If the 24 Hour zone also has an entry delay programmed (P144E), this delay will apply. If the 24 Hour zone activates but then resets before the entry delay expires no alarm will be generated. Once an alarm has been generated with a 24 Hour Auto-reset zone, the alarm will be removed automatically once the input reseals.

Option 5 **Zone is a 24 Hour Fire Zone** - If this option is on the zone will be constantly monitored regardless of the arm/disarm state of the panel. If the 24 Hour Fire zone also has an entry delay programmed (P144E), this delay will apply. If the 24 Hour Fire zone activates but then resets before the entry delay expires no alarm will be generated. Once the alarm has been generated it must be cleared by entry of a valid User code. The 24 Hour Fire Zone will also cause an alarm output to pulse the alarm to differentiate a fire alarm from a burglar alarm (ie a fire alarm will switch the output on and off at the pulse timer rate whereas a burglar alarm on the same output will sound continuously).

Option 6 **Zone is a One-Shot Zone** - If a zone is set as a One-Shot zone it can only trigger the alarm once per armed cycle. If it is not a One-Shot zone it can trigger the alarm multiple times during the armed state. If a value other than “0” is programmed at location P146E the programmed Re-trigger time must expire before the zone can alarm again.

Option 7 **Zone is a Chime Zone** - If this option is on, the zone will operate Chime mode when disarmed. When the alarm is armed the Chime Mode is disabled for this zone. A Chime zone can sound the keypad buzzer or operate an output to indicate that the zone is unsealed. It is normally used to monitor areas during the daytime.

Option 8 **Zone is a Permanent Chime Zone** - If this option is on, the zone will operate Chime mode when armed or disarmed. When the alarm is armed the zone will continue to only be a Chime Mode Zone and will not cause a burglar alarm. A Chime zone can sound the keypad buzzer or operate an output to indicate that the zone is unsealed.

ZONE OPTIONS C

ZONE OPTIONS C - P124E 1-16E

Option 1 - Can Arm if Zone is not Ready
Option 2 - Will Send Multiple Reports to Dialler
Option 3 - Zone is Monitored for Inactivity
Option 4 - Zone is on Soak Test
Option 5 - Zone will report to Area B Account Number
Option 6 - Zone will Not Report 24 hour Alarms via Dialler
Option 7 - Spare
Option 8 - Spare

Option 1 **Can Arm if Zone is not Ready** - If this option is turned on, plus Options 7 or 8 or on at P45E (cannot Arm if zones not sealed/Ready), this zone can be unsealed and the panel can still be armed. This option allows the panel to still be armed if a low security zone is unsealed yet still stopping arming if a high security zone is unsealed.

Option 2 **Will Send Multiple Reports to Dialler** - If this option is turned on, a zone will send an alarm report to the monitoring station every time it is activated. If the option is turned off, the zone can only send one alarm report per armed cycle.

Option 3 **Zone is Monitored for Inactivity** - If this option is on the zone will be checked to see that it operates during the disarmed state. If it is not operated within the time set at P163E a “Sensor-watch” alarm will be generated. This feature is designed to detect a faulty zone that is not operating normally or one that has had it’s detection area blocked. If a detector has this option turned on and it doesn’t operate when disarmed, the timer at location P163E will start to count down. The timer is stopped when the area assigned to the zone is armed and resumes with the saved value when disarmed again. The timer is reset back to the original value every time the zone operates while disarmed.

Option 4 **Zone is a Soak Test Zone** - If a zone is suspected of being faulty and is causing false alarms, you can turn it into a Soak Test Zone and it will still be monitored for alarms when armed but it will not cause the sirens to sound or report to the dialler. The Soak Test zone will still be logged in the event memory however so it is possible to check the activity of the zone, via the memory, and after a suitable period of no alarms it can be re-instated as part of the alarm by removing the Soak Test option.

Option 5 **Zone will report to Area B Account Code** - If a zone is in Areas A & B and it goes into alarm, it will default to reporting on the Area A Account Code (see P62E). By turning this option on when a zone is in both areas it will report to Area B account Code.

Option 6 **Zone will Not Report 24 Hour Alarms via Dialler** - If this option is turned on and the zone is set as a 24 Hour type, when an alarm is generated, the alarm will not be transmitted to the monitoring station via the dialler.

ZONE EOL (End-of-Line) OPTIONS

There are 8 hardwired zone inputs on the panel. Each of these inputs can have different EOL (End-of-Line) configurations if desired. The input can be a short circuit wire loop (Type 0), one of 11 different single resistor values (Types 1-11), can provide 8 zones with tamper (Types 12,13), zone doubling to allow for up to 16 zones plus tamper (Type 14), or zone doubling without tamper (Type 15). See chart on page 5 for the resistor combinations and colour codes.

ZONE EOL (End-of-Line) OPTIONS - P125E 1-8E

Option 0 - Short Circuit Loop
Option 1 - 1k
Option 2 - 1k5
Option 3 - 2k2
Option 4 - 3k3
Option 5 - 3k9
Option 6 - 4k7
Option 7 - 5k6
Option 8 - 6k8
Option 9 - 10k
Option 10 - 12k
Option 11 - 22k
Option 12 - 2k2 // 4k7
Option 13 - 3k3 // 6k8
Option 14 - 2k2 // 4k7 // 8k2
Option 15 - 4k7 // 8k2

ZONE RESPONSE TIME

There are 8 hardwired zone inputs on the panel. The response time (how quickly the input responds to an input trigger) can be varied for each zone. The first 8 settings are very fast response times normally used when vibration sensors are connected to a zone input. Response Settings 1-8 (vibration) can only be applied to zones 1-8 and the zone EOL setting (P125E) must be set to type 3 (2k2). Zone doubling is not available when vibration settings are used.
The response settings 9-26 start at about 200 ms for setting 9 through to 1.05 sec for setting 26. If zone doubling is turned on, both zones on an input will have the same response time (eg zones 1 & 9 would have the same time).

ZONE RESPONSE TIME - P126E 1-8E

Response Setting 1 - Highest Vibration setting
Response Setting 2 - Middle Vibration setting
Response Setting 3 - Middle Vibration setting
Response Setting 4 - Middle Vibration setting
Response Setting 5 - Middle Vibration setting
Response Setting 6 - Middle Vibration setting
Response Setting 7 - Middle Vibration setting
Response Setting 8 - Lowest Vibration setting

Response Setting 9 - 200 ms
Response Setting 10 - 250 ms
Response Setting 11 - 300 ms
Response Setting 12 - 350 ms
Response Setting 13 - 400 ms
Response Setting 14 - 450 ms
Response Setting 15 - 500 ms
Response Setting 16 - 550 ms
Response Setting 17 - 600 ms
Response Setting 18 - 650 ms
Response Setting 19 - 700 ms
Response Setting 20 - 750 ms
Response Setting 21 - 800 ms
Response Setting 22 - 850 ms
Response Setting 23 - 900 ms
Response Setting 24 - 950 ms
Response Setting 25 - 1000 ms
Response Setting 26 - 1050 ms

RADIO ZONE DETECTOR TYPE

Any of the 16 zones can be made radio zones. There are multiple types of radio detectors that can be used on the panel. It is important to set the correct radio type for the detector being used so that all of the special functions such as battery low signals, tamper alarms, reed switch open/close signals and supervision signals can all be monitored correctly.

RADIO ZONE DETECTOR TYPE - P127E 1-16E
Radio Type 0 - Generic
Radio Type 1 - Crow Merlin PIR (supervised signal ignored)
Radio Type 2 - Crow Merlin PIR (supervised signal active)
Radio Type 3 - Freelink with checksum (supervised signal active)
Radio Type 4 - Freelink with checksum (Non-supervised)
Radio Type 5 - Crow AE series battery Low
Radio Type 6 - Crow AE series Radio Reed Switch
Radio Type 11 - Ness Radio devices Battery Low
Radio Type 12 - Ness Radio Reed Switch
Radio Type 31 - Visonic K900 Radio PIR
Radio Type 32 - Visonic Powercode (supervised signal ignored)
Radio Type 33 - Visonic Powercode (supervised signal active)
Radio Type 34 - Siemens (supervised signal ignored)
Radio Type 35 - Siemens (supervised signal active)

Type 0 **Generic** - If you wish to use a detector that is not on the above list then set the type a “0” and the panel will still respond to the radio detector every time the learnt code is received.

Type 1 **Crow Merlin PIR (unsupervised) -** If a Crow Merlin radio PIR is used on the panel select Type 1 so the panel correctly recognizes the alarm, tamper & battery low signal from the device. The automatic supervised signal sent every 40 minutes by the PIR is ignored in this mode.

Type 2 **Crow Merlin PIR (supervised) -** If a Crow Merlin radio PIR is used selecting Type 2 will allow the panel to correctly recognize the alarm, tamper & battery low signal from the device. Selecting this option also starts the supervise timer (P25E4E). The supervise timer is constantly being reset while valid supervisory signals are being received from the detector. If no supervise signals are received from the PIR within the supervise timer value a supervised alarm is generated.

Type 3 **Freelink with checksum (supervised signal active) -** If a Crow Freelink radio PIR is used selecting

Type 3 will allow the panel to correctly recognize the alarm, tamper & battery low signal from the device. Selecting this option also starts the supervise timer (P25E4E). The supervise timer is constantly being reset while valid supervisory signals are being received from the detector. If no supervise signals are received from the PIR within the supervise timer value a supervised alarm is generated.

Type 4 **Freelink with checksum (non-supervised) -** If a Crow Freelink radio PIR is used selecting Type 4 will allow the panel to correctly recognize the alarm, tamper & battery low signal from the device. The automatic supervisory signal sent by the PIR is ignored in this mode.

Type 5 **Crow AE Series Battery Low** - If a Crow (AE) radio pendant or PIR is used on the panel selecting Type 5 allows the panel to correctly recognize the battery low and tamper signals from Crow (AE) devices.

Type 6 **Crow AE Series Radio Reed Switch** - If a Crow (AE) radio reed switch is used on the panel selecting Type 6 allows the panel to correctly recognize the open and closed signals from the reed switch so the zone LED can follow the correct state of the reed switch (ie open or closed). It also recognizes the battery low signal from the Crow (AE) device.

Type 11 **Ness Battery Low** - If a Ness radio pendant or PIR is used on the panel selecting Type 11 allows the panel to correctly recognize the battery low and tamper signals from Ness devices.

Type 12 **Ness Radio Reed Switch** - If a Ness radio reed switch is used on the panel selecting Type 12 allows the panel to correctly recognize the battery low and tamper signals from the Ness device. It also recognizes the open and closed signals from the reed switch so the zone LED can follow the correct state of the reed switch (ie open or closed)

Option 31 **Visonic Radio PIR -** If a Visonic K900 radio PIR is used on the panel selecting Type 31 allows the panel to correctly recognize the alarm, tamper & battery low signal from this device.

Option 32 **Visonic Powercode (unsupervised) -** If a Visonic Powercode radio device is used on the panel selecting Type 32 allows the panel to correctly recognize the alarm, tamper and battery low signal from the device. The supervisory signal sent by the device is ignored in this mode.

Option 33 **Visonic Powercode (supervised) -** If the Visonic Powercode range of radio PIR or reed switch are used on the panel selecting Type 33 allows the panel to correctly recognize the alarm, tamper & battery low signals from the devices as well as the open/close signal from the reed switch. Selecting this option also starts the supervise timer (P25E4E). The supervise timer is constantly being reset while valid supervisory signals are being received from the detector. If no supervise signals are received from the PIR within the supervise timer value a supervised alarm is generated.

Option 34 **Siemens (unsupervised) -** If a Siemens radio device is used on the panel selecting Type 34 allows the panel to correctly recognize the alarm, tamper and battery low signal from the device. The supervisory signal sent by the device is ignored in this mode.

Option 35 **Siemens (supervised) -** If the Siemens radio PIR is used on the panel selecting Type 35 allows the panel to correctly recognize the alarm, tamper & battery low signals from the device. Selecting this option also starts the supervise timer (P25E4E). The supervise timer is constantly being reset while valid supervisory signals are being received from the detector. If no supervise signals are received from the PIR within the supervise timer value a supervised alarm is generated.

ARMED ZONE ALARMS to OUTPUT

ARMED ZONE ALARMS to OUTPUT - P128E 1-16E

Option 1 - Output 1
Option 2 - Output 2
Option 3 - Output 3
Option 4 - Output 4
Option 5 - Output 5
Option 6 - Output 6
Option 6 - Output 7
Option 7 - Output 8

If an Area is Armed and a zone assigned to that Area activates, the zone can trigger selected Outputs for local alarm signalling. This location assigns Zones to Outputs for alarms that occur when in the Full Armed State.

STAY MODE ZONE ALARMS to OUTPUT

STAY MODE ZONE ALARMS to OUTPUT - P129E 1-16E

Option 1 - Output 1
Option 2 - Output 2
Option 3 - Output 3
Option 4 - Output 4
Option 5 - Output 5
Option 6 - Output 6
Option 6 - Output 7
Option 7 - Output 8

If an Area has Stay Mode Armed and a zone assigned to that Area activates, the zone can trigger selected Outputs for local alarm signalling. This location assigns Zones to Outputs for alarms that occur when Stay Mode is Armed.

24 HOUR ZONE ALARMS to OUTPUT

24 HOUR ZONE ALARMS to OUTPUT - P130E 1-16E

Option 1 - Output 1
Option 2 - Output 2
Option 3 - Output 3
Option 4 - Output 4
Option 5 - Output 5
Option 6 - Output 6
Option 6 - Output 7
Option 7 - Output 8

If a zone is programmed as a 24 Hour type and it activates, the zone can trigger selected Outputs for local alarm signalling. If the zone is a standard 24 hour type (P123E3E) the output will turn for the full reset time, if it is an Auto-reset type (P123E4E) the output will either turn off when the reset time expires or if the input clears and if it is a Fire type (P123E5E) the output will pulse at a rate equal to the pulse time for that output.

CHIME ZONE ALARMS to OUTPUT

CHIME ZONE ALARMS to OUTPUT - P131E 1-16E

Option 1 - Output 1
Option 2 - Output 2
Option 3 - Output 3
Option 4 - Output 4
Option 5 - Output 5
Option 6 - Output 6
Option 6 - Output 7
Option 7 - Output 8

If a zone is programmed as a Chime zone (P123E7E) and it activates, the zone can trigger selected Outputs for local alarm signalling. The output will operate for the Chime to Output time at location P41E. The zone must clear before the output can be activated again.

ZONE TAMPER ALARMS to OUTPUT

ZONE TAMPER ALARMS to OUTPUT - P132E 1-16E

Option 1 - Output 1
Option 2 - Output 2
Option 3 - Output 3
Option 4 - Output 4
Option 5 - Output 5
Option 6 - Output 6
Option 6 - Output 7
Option 7 - Output 8

If a hardwired zone is programmed to allow tamper monitoring (P125E types 12,13 & 14), or the zone is a radio detector with tamper, the zone tamper can trigger selected Outputs for local alarm signalling.

ARMED ZONE ALARM BEEPS TO KEYPAD

ARMED ZONE ALARM BEEPS TO KEYPAD - P134E 1-16E

Option 1 - Keypad 1
Option 2 - Keypad 2
Option 3 - Keypad 3
Option 4 - Keypad 4
Option 5 - Keypad 5
Option 6 - Keypad 6
Option 6 - Keypad 7
Option 7 - Keypad 8

If an Area is Armed and a zone assigned to that Area activates, the zone can sound the buzzer at selected keypads for local alarm signalling. This location assigns zone alarm beep to a keypad for alarms that occur when in the Full Armed State.

STAY MODE ZONE ALARM BEEPS TO KEYPAD

STAY MODE ZONE ALARM BEEPS TO KEYPAD - P135E 1-16E

Option 1 - Keypad 1
Option 2 - Keypad 2
Option 3 - Keypad 3
Option 4 - Keypad 4
Option 5 - Keypad 5
Option 6 - Keypad 6
Option 6 - Keypad 7
Option 7 - Keypad 8

If an Area is Stay Mode Armed and a zone assigned to that Area activates, the zone can sound the buzzer at selected keypads for local alarm signalling. This location assigns zone alarm beep to a keypad for alarms that occur when in Stay Mode is Armed.

24 HOUR ZONE ALARM BEEPS TO KEYPAD

24 HOUR ZONE ALARM BEEPS TO KEYPAD - P136E 1-16E

Option 1 - Keypad 1
Option 2 - Keypad 2
Option 3 - Keypad 3
Option 4 - Keypad 4
Option 5 - Keypad 5
Option 6 - Keypad 6
Option 6 - Keypad 7
Option 7 - Keypad 8

If a zone is programmed as a 24 Hour type and it activates, the zone can sound the buzzer at selected keypads for local alarm signalling. If the zone is a standard 24 hour type (P123E3E) or Fire type (P1235E) the keypad buzzer will sound until reset by a User but if it is an Auto-reset type (P123E4E) the keypad buzzer will reset when the input clears.

CHIME ZONE ALARM BEEPS TO KEYPAD

CHIME ZONE ALARM BEEPS TO KEYPAD - P137E 1-16E

Option 1 - Keypad 1
Option 2 - Keypad 2
Option 3 - Keypad 3
Option 4 - Keypad 4
Option 5 - Keypad 5
Option 6 - Keypad 6
Option 6 - Keypad 7
Option 7 - Keypad 8

If a zone is programmed as a Chime zone and it activates, the zone can sound the buzzer at selected keypads for local alarm signalling. The duration of the Chime beep is programmed at location P94E. The Chime function can also be locally disabled at each keypad individually if not required (see Page 32 for details).

ZONE TAMPER ALARM BEEPS TO KEYPAD

ZONE TAMPER ALARM BEEPS TO KEYPAD - P139E 1-16E

Option 1 - Keypad 1
Option 2 - Keypad 2
Option 3 - Keypad 3
Option 4 - Keypad 4
Option 5 - Keypad 5
Option 6 - Keypad 6
Option 6 - Keypad 7
Option 7 - Keypad 8

If a hardwired zone is programmed to allow tamper monitoring (P125E types 12,13 & 14), or the zone is a radio detector with tamper, the zone tamper can beep the keypad buzzer at individual keypads.

RADIO SUPERVISE FAIL BEEPS TO KEYPAD

RADIO SUPERVISE FAIL BEEPS TO KEYPAD - P140E 1-16E

Option 1 - Keypad 1
Option 2 - Keypad 2
Option 3 - Keypad 3
Option 4 - Keypad 4
Option 5 - Keypad 5
Option 6 - Keypad 6
Option 6 - Keypad 7
Option 7 - Keypad 8

If a zone is programmed as a radio zone and that type is actively monitoring the supervision signal, a supervise signal failure from the detector alarm can sound the buzzer at selected Keypads for local alarm signalling.

ZONE INACTIVITY ALARM BEEPS TO KEYPAD

ZONE INACTIVITY ALARM BEEPS TO KEYPAD - P141E 1-16E

Option 1 - Keypad 1
Option 2 - Keypad 2
Option 3 - Keypad 3
Option 4 - Keypad 4
Option 5 - Keypad 5
Option 6 - Keypad 6
Option 6 - Keypad 7
Option 7 - Keypad 8

If the zone is programmed for inactivity monitoring (P124E3E) and it is not operated within the time set at P163E a “Sensor-watch” alarm will be generated. A “Sensor-watch” failure from the detector can sound the buzzer at selected

Keypads for local alarm signalling.

ARMED ZONE ENTRY DELAY BEEPS TO KEYPAD

ARMED ZONE ENTRY DELAY BEEPS TO KEYPAD - P142E 1-16E

Option 1 - Keypad 1
Option 2 - Keypad 2
Option 3 - Keypad 3
Option 4 - Keypad 4
Option 5 - Keypad 5
Option 6 - Keypad 6
Option 6 - Keypad 7
Option 7 - Keypad 8

If the alarm is Armed and a delay zone triggers the entry delay it can also beep the keypad buzzer to warn that the entry delay is counting down and the alarm should be turned off.

STAY MODE ENTRY DELAY BEEPS TO KEYPAD

STAY MODE ENTRY DELAY BEEPS TO KEYPAD - P143E 1-16E

Option 1 - Keypad 1
Option 2 - Keypad 2
Option 3 - Keypad 3
Option 4 - Keypad 4
Option 5 - Keypad 5
Option 6 - Keypad 6
Option 6 - Keypad 7
Option 7 - Keypad 8

If Stay Mode is Armed and a Stay Mode delay zone triggers the entry delay it can also beep the keypad buzzer to warn that the entry delay is counting down and the alarm should be turned off.

ARMED ZONE ENTRY DELAY TIME

ARMED ZONE ENTRY DELAY TIME - P144E 1-16E (Value 0-9999 Seconds)

Each Zone has it's own Entry Delay time when in the Full Armed State. The delay can be programmed from 0-9999 seconds in one second increments. If the entry delay is set to "0" the zone will be an instant zone.

STAY MODE ZONE ENTRY DELAY TIME

STAY MODE ZONE ENTRY DELAY TIME - P145E 1-16E (Value 0-9999 Seconds)

Each Zone has it's own Entry Delay time when in Stay Mode. The delay can be programmed from 0-9999 seconds in one second increments. If the entry delay is set to "0" the zone will be an instant zone.

ZONE RE-TRIGGER TIME

ZONE RE-TRIGGER TIME - P146E 1-16E (Value 0-255 Minutes)

Each Zone has it's own alarm Re-trigger Time. The delay can be programmed from 0-255 minutes. Once a zone has activated it cannot be activated again until the Re-trigger Time has expired.

ZONE ALARM CONTACT ID REPORT CODE

ZONE ALARM CONTACT ID REPORT CODE - P157E 1-16E (3 digit event code)

Normally a zone alarm would default to reporting a standard "Burglar Alarm" code of "130" when the zone activates. If the zone is not being used as a burglar alarm and you need to identify the correct type of alarm event you can change the event code at this location (eg if zone 5 was a fire sensor you could program a value of "110" at P157E5E).

ZONE NEAR ALARM CONTACT ID REPORT CODE

ZONE NEAR ALARM CONTACT ID REPORT CODE - P158E 1-16E (3 digit event code)

If the Near & Confirmed zone alarm reporting option was active the default report code for a “Near Alarm” is “138” when the zone activates for the first time. There should be no reason to change this code but if some special application was to be used it can be changed at this location.

ZONE CONFIRMED ALARM CONTACT ID REPORT CODE

ZONE CONFIRMED ALARM CONTACT ID REPORT CODE - P159E 1-16E (3 digit event code)

If the Near & Confirmed zone alarm reporting option was active the default report code for a “Confirmed Alarm” is “139” when a second zone activates within 60 minutes of the near alarm. There should be no reason to change this code but if some special application was to be used it can be changed at this location.

ZONE ALARM VOICE MESSAGE NUMBER

ZONE ALARM VOICE MESSAGE NUMBER - P160E 1-16E (Value 0-99)

If the Optional Voice Board is fitted and the alarms are to be reported in Voice Format, each zone can be assigned a voice message to report the alarm type. If this location is set to “0” the zone will not report via the dialler. If Option 1 at P46E is turned on (use near and confirmed alarm reporting) the panel will not send an alarm in this format.

ARMED ENTRY DELAY to OUTPUT

ARMED ENTRY DELAY to OUTPUT - P161E 1-16E

Option 1 - Output 1
Option 2 - Output 2
Option 3 - Output 3
Option 4 - Output 4
Option 5 - Output 5
Option 6 - Output 6
Option 6 - Output 7
Option 7 - Output 8

If the alarm is Armed and a delay zone triggers the entry delay it can also beep an Output to warn that the entry delay is counting down and the alarm should be turned off.

STAY MODE ENTRY DELAY to OUTPUT

STAY MODE ENTRY DELAY to OUTPUT - P162E 1-16E

Option 1 - Output 1
Option 2 - Output 2
Option 3 - Output 3
Option 4 - Output 4
Option 5 - Output 5
Option 6 - Output 6
Option 6 - Output 7
Option 7 - Output 8

If Stay Mode is Armed and a delay zone triggers the entry delay it can also beep an Output to warn that the entry delay is counting down and the alarm should be turned off.

SENSOR-WATCH TIME

SENSOR-WATCH TIME - P163E 1-16E (Value 0-9999 Minutes)

If the zone is programmed as a “Sensor-Watch” zone (P124E3E) and it is not operated within the time set at this location a “Sensor-watch” alarm will be generated. If a detector has this option turned on and it doesn’t operate when disarmed, this timer will start to count down for the zone/s concerned. The timer is stopped when the area assigned to the zone/s is armed and resumes with the saved value when disarmed again. The timer is reset back to the original value every time the zone operates while disarmed.

LEARN RADIO ZONE CODES

LEARN RADIO ZONE CODES - P164E 1-16E

A RADIO Zone must be enrolled into the panel before it can be used.

To learn a Radio Zone you must first have a compatible receiver connected to the panel keypad buss. With the receiver connected and the panel in program mode, entering P164E then the zone number you wish to enrol, eg 5E for zone 5, the keypad will start to beep to indicate that learn mode has been started and the LED on the receiver will flash. Now operate the detector you wish to learn into Zone 5 slot. Once the transmitted code has been received by the panel and saved, the keypad will stop beeping and the LED on the receiver will stop flashing.

When learning a new radio zone the panel checks all possible locations (including pendants) before saving the new code to ensure that the code has not already been loaded into another slot. If the code already exists, the keypad will indicate which slot the code is already installed at. A number from 1-16 indicates a zone slot and a number from 21-100 indicates a user slot.

DELETE a RADIO ZONE CODE

DELETE a RADIO ZONE CODE - P165E 1-16E

If you wish to delete a single Radio Zone, pressing P165E then the Zone number while in Program Mode will delete the stored code against that Zone, eg P165E 5E will remove the code stored for Zone 5.

FIND a ZONE LOCATION

FIND a RADIO ZONE LOCATION - P166E 0E

If you have a Radio detector loaded into the panel but are unsure which location (Zone #), pressing P166E then 0E while in Program Mode on an LED Keypad will start “Find” Mode. There is no need to press 0E when using an LCD keypad because the keypad will give you written prompts after entering P166E. The keypad will start to beep to indicate that “Find” mode has been started and the LED on the Receiver will flash. Now operate the Radio Detector you wish to find. If the Radio Detector is in memory the keypad will display the number (1-16 indicates a zone, and 21-100 indicates a user). The keypad will stop beeping and the LED on the Receiver will stop flashing.

HOLIDAYS

HOLIDAYS - P170E 1-8E (DDMMYY)

It is possible to pre-program up to 8 holidays. Holidays can override the time-zone function on the programmed day. For example, if an output was automatically controlled by a time-zone, the pre-programmed holidays can stop the output from turning on or off on a holiday. A holiday consists of a single day programmed by Date/Month/Year (DDMMYY). The holiday begins at the start of the day (00:00:00) and finishes immediately before midnight (23:59:59) on the programmed date. Holidays can be programmed in any order (although for simplicity it is recommended that they are programmed in chronological order) and the panel automatically removes them once the day ends. If you wish to manually remove a programmed holiday you must program in 000000 at the holiday location. If the holiday date you are attempting to enter is older than the current date the panel will not save the data eg if the current date was 111204 (11th of December 2004) and you tried to enter in 101204 (10th of December 2004) the panel will not save the programmed holiday as the day has already elapsed.

TIME ZONE DAYS

TIMEZONE DAYS - P171E 1-8E

Option 1 - Sunday
Option 2 - Monday
Option 3 - Tuesday
Option 4 - Wednesday
Option 5 - Thursday
Option 6 - Friday
Option 7 - Saturday
Option 8 - Invert

The Time-zone days are the days that the time-zone will be active. You can select any combination of the days, eg days 2,3,4,5,6 for Monday to Friday or 1&7 for Saturday & Sunday, etc. The invert function selects all times outside those selected. There are 8 Time-zones that can be programmed.

TIME ZONE START TIME

TIMEZONE START TIME - P172E 1-8E (HHMM)

The Time-zone start time is when the time-zone begins. It would normally be set to the beginning of the day, eg if you were automatically arming and disarming an area with a time-zone and you wanted it to disarm when the time-zone started you would set the start time to about 0830. The start time is programmed in 24 hour format (eg 0000-2359).
If you are setting up the time-zone during the active period (eg if the time-zone goes from 0830-1700 and the current time is 1200) you will have to wait until the next minute expires before the panel will update the time-zone status. You can see if the time-zone is active at location P200E4E.

TIME ZONE END TIME

TIMEZONE END TIME - P173E 1-8E (HHMM)

The Time-zone end time is when the time-zone finishes. It would normally be set to the end of the day, eg if you were automatically arming and disarming an area with a time-zone and you wanted it to arm when the time-zone ended you would set the end time to about 1700. The Time-zone end is active at the end of the programmed minute eg if the time-zone end time was set to 1700, the actual time that the time-zone operates will be at 17:01. The end time is programmed in 24 hour format (eg 0000-2359)

TIME ZONE OPTIONS

TIMEZONE OPTIONS - P174E 1-8E

1 = Ignore Holidays
2-8 = Spare

If option 1 is turned on for a Time-zone, that time-zone will not be disabled when a holiday occurs. Normally when a holiday occurs all Time-zones will be disabled but if this option is turned on the Time-zone will not be affected when a holiday is active.

DIALLER OPTIONS

DIALLER OPTIONS - P175E 1E

Option 1 - Dialler is Enabled
Option 2 - Fax Defeat
Option 3 - Disable Telephone Line Monitoring
Option 4 - Pulse Dialling (NOTE: For DTMF 4 & 5 must be OFF)
Option 5 - Reverse Pulse Dialling (NOTE: For DTMF 4 & 5 must be OFF)
Option 6 - Long DTMF Dialling Digits
Option 7 - Auto-detect Modem
Option 8 - Force V21 Mode

Option 1 **Dialler is Enabled** - If this option is turned off the dialler will be disabled. The option must be on to allow the dialler to make calls.

Option 2 **Fax Defeat -** The panel can automatically answer an in-coming call in two ways. The first is to set the auto-answer ring count to a convenient number (P175E4E) and let the phone ring until this number is reached at which time the panel will answer the call. The second method is to use fax defeat which entails calling the panel and letting it ring no more than 4 times, hanging up, then ringing back within 45 seconds. The panel will now answer the call on the first ring. There is also a manual answer function described on page 36.

Option 3 **Disable Telephone line Monitoring -** If the panel is connected to a poor telephone line and the line failure alarm is appearing regularly, by turning this option on the panel will not do the line test.

Option 4 **Pulse Dial -** If this option is Off the panel will dial in DTMF format, if On then the panel will dial using Pulse Dialling format

Option 5 **Reverse Pulse Dial -** If this option is On, and option 4 is On, then the panel will dial using Reverse Pulse Dialling format (eg the number 9 = 1 pulse). If this option is Off and Option 4 is On, the panel will dial in normal Pulse format (eg the number 9 = 9 pulses).

Option 6 **Long DTMF Dialling Digits -** If this option is Off, the panel will dial using normal dialling (75ms on & 75ma off). If it is On, the panel will dial using the long tones (100ms on & 100ms off).

Option 7 **Auto-detect Modem** - If this option is on the panel will answer an in-coming call with the V21 acknowledge tone. If the modem does not respond within 5 seconds the panel will then generate the acknowledge tones for BELL103 format. It will repeat this cycle twice and then hang-up if no communication with a modem is established.

Option 8 **Force V21 Mode** - The dial up panel to PC link can be established using either Bell 103 or V21. If the auto-detect function at option 7 does not result in the best format for your modem then you can force the panel to only communicate in one format. If the LED is off the format is BELL103, LED on means V21.

DIALLER OPTIONS 2

DIALLER OPTIONS 2 - P175E 2E

Option 1 - Step to next Number
Option 2 - Upload/download uses Call-back Number
Option 3 - Upload/download only if Disarmed
Option 4 - Send Test Calls Only if Armed
Option 5 - Spare
Option 6 - Hold line open following Domestic/Voice report for DTMF control
Option 7 - First to Open Last to Close Reporting
Option 8 - Spare

Option 1 **Step to next Number** - If more than one telephone number is programmed, this option will force the dialler to step through each number after a call. If this option is off the dialler will make all calls to the first number before moving on to the next number.

Option 2 **Upload/download uses Call-back Number -** A Telephone number can be programmed as a Call-back number. If this option is turned on, and a PC contacts the panel a direct connection cannot be made with the PC. The panel will hang-up the call and dial the PC back on the Call-back number.

Option 3 **Upload/download only if Disarmed -** If this option is turned on, and a PC attempts to contact the panel while the alarm is Armed a direct connection cannot be made as the panel will not answer the call. If the panel is Disarmed a connection can be established.

Option 4 **Send Test Calls Only if Armed -** If this option is On the panel will only send a daily test call if it is Armed. This option assumes that the normal arm/disarm signals sent on a daily basis can serve as a test and that the connection only needs to be verified daily if the panel is left in the armed state for periods longer than 24 hours.

Option 5 **Spare**

Option 6 **Hold line open following Domestic/Voice report for DTMF control -** If this option is On the dialler will keep the telephone line open after being kissed-off following a Domestic or Voice alarm call so that the person at the phone can then use their DTMF codes to arm/disarm the system or turn on the optional microphone if required.

Option 7 **First to Open Last to Close Reporting** - If this option is on and the alarm is split into two Areas, then the "Arm" report to the monitoring station will only be sent when both areas are armed and it will be a single report on Area A account code (last to close). On Disarming of the alarm the disarm report will be sent when either Area is disarmed (first to open). Only one disarm report will be sent using the Area A account code. If zones in both areas are bypassed, the bypass report for all zones will only be sent when both areas are armed (last to close) but the Bypass restore reports will be sent only when the Area associated with the zone is disarmed. In this way if an area remains armed and it's associated bypassed zone/s are still bypassed the monitoring station knows that the bypasses have not been removed yet.

AUTO-ANSWER RING COUNT

AUTO-ANSWER RING COUNT - P175E 3E (Value 0-99)

If the dialler is set to answer an in-coming call for remote control or upload/download the number of rings before answering the call can be set at this location. There is also a manual answer function described on page 36.

TIME of the FIRST DIALLER TEST CALL

TIME of the FIRST DIALLER TEST CALL - P175E 4E (Value 0000-2359)

If the dialler is set to send Automatic Test Calls, the start time for the first call is set at this location. This allows the test call to be linked to a quite period where the line would not normally be used (eg 2300)

TEST CALL TIME PERIOD

TEST CALL TIME PERIOD - P175E 5E (Value 0-255 Hours)

When reporting in Contact ID format the panel can send regular test calls to the monitoring company to check the integrity of the panel and the line. The regularity of the test calls is set at this location. It would normally be set to a value of 24 so that a test call is sent one a day. The start time for the first test should also be set at location P175E5E.

KEYPAD LISTEN-IN OPTIONS

KEYPAD LISTEN-IN OPTIONS - P175E 6E

Option 1 - Listen-in Enabled when dialling only and in Disarmed State
Option 2 - Listen-in Enabled when dialling only and in Armed State
Option 3 - Listen-in Enabled when dialling only and in Monitor Mode
Option 4 - Listen-in Enabled through the entire call only in Disarmed state
Option 5 - Listen-in Enabled through the entire call only in Armed State
Option 6 - Listen-in Enabled through the entire call only in Monitor Mode

Option 7 - Listen-in Enabled when the panel answers a call
Option 8 - Listen-in on at All Times

The panel provides the facilities to use the buzzer in the keypad as a speaker to listen to the call being made by the dialler. To use this feature a 5th wire must be connected between the panel and a keypad using the listen-in terminals. The options above allow many combinations of the listen-in to be used or it can be disabled by selecting no options.

OUTPUT # 1 LISTEN-IN OPTIONS

OUTPUT # 1 LISTEN-IN OPTIONS - P175E 7E

Option 1 - Listen-in Enabled when dialling only and in Disarmed State
Option 2 - Listen-in Enabled when dialling only and in Armed State
Option 3 - Listen-in Enabled when dialling only and in Monitor Mode
Option 4 - Listen-in Enabled through the entire call only in Disarmed state
Option 5 - Listen-in Enabled through the entire call only in Armed State
Option 6 - Listen-in Enabled through the entire call only in Monitor Mode
Option 7 - Listen-in Enabled when the panel answers a call
Option 8 - Listen-in on at All Times

The panel provides the facilities to use a speaker connected to Output # 1 to listen to the call being made by the dialler. For this to happen the device connected to output # 1 must be an 8Ω horn speaker. The options above allow many combinations of the listen-in to be used or it can be disabled by selecting no options.

DIALLING PRE-FIX NUMBER

DIALLING PRE-FIX NUMBER - P175E 8E (Value 1-16 digits)

The panel can be programmed with a Pre-fix telephone number. The Pre-fix number can be up 16 digits long. The Pre-fix number can be dialled before any of the 8 Telephone numbers if required (P183E Option 7).

"PANIC" ALARM CONTACT ID REPORT CODE

"PANIC" ALARM CONTACT ID REPORT CODE - P175E 9E (3 digit event code)

Normally a keypad initiated Panic alarm would default to reporting a standard "Panic Alarm" code of "120". If the panic alarm is being used for some other purpose and you need to identify the correct type of alarm event you can change the event code at this location.

"FIRE" ALARM CONTACT ID REPORT CODE

"FIRE" ALARM CONTACT ID REPORT CODE - P175E 10E (3 digit event code)

Normally a keypad initiated Fire alarm would default to reporting a standard "Fire Alarm" code of "110". If the fire alarm is being used for some other purpose and you need to identify the correct type of alarm event you can change the event code at this location.

"MEDICAL" ALARM CONTACT ID REPORT CODE

"MEDICAL" ALARM CONTACT ID REPORT CODE - P175E 11E (3 digit event code)

Normally a keypad initiated Medical alarm would default to reporting a standard "Medical Alarm" code of "100". If the medical alarm is being used for some other purpose and you need to identify the correct type of alarm event you can change the event code at this location.

OUTPUT DTMF CONTROL CODE NUMBER

OUTPUT DTMF CONTROL CODE NUMBER - P175E 12E (Value 1-4 digit code 0-9999)

The panel can be configured to allow remote operation of the Outputs via a remote telephone. The code programmed at this address is the DTMF code that must be used when performing this function. When dialling the panel and it has

answered the call, after waiting for the panel modem tones to stop you can enter in the 4 digit DTMF code plus the Output number you wish to control, eg <1> for Output # 1, and the current status will be given of the Output associated with the code entered. After that, if you press the "*" button on the telephone the status of the output will toggle eg if is was previously On it will change to Off or vice versa. When finished you simply hang-up and 15 seconds later the panel will release the line.

MICROPHONE ON/OFF DTMF CODE NUMBER

MICROPHONE ON/OFF DTMF CODE NUMBER - P175E 13E (Value 1-4 digit code 0-9999)

The panel can be configured to allow remote listen-in via an on-site microphone. The Voice Board must be fitted for the microphone feature to be available The code programmed at this address is the DTMF code that must be used when turning the microphone On or Off. When dialling the panel and it has answered the call, after waiting for the panel modem tones to stop you can enter in the 4 digit DTMF code plus the <*> button on the telephone. This will turn the Microphone On. By Pressing the <*> button again the microphone will be turned Off. When finished you simply hang-up and 15 seconds later the panel will release the line.

DIALLER ACKNOWLEDGE DTMF CODE NUMBER

DIALLER ACKNOWLEDGE DTMF CODE NUMBER - P175E 14E (Value 1-4 digit code 0-9999)

If the panel is set to report in Domestic or Voice reporting formats, you can simply kiss-off (acknowledge) the alarm by pressing the <#> button on the remote telephone. Alternatively if you require a more secure kiss-off method to ensure that the alarm is only kissed off by the correct person you can program a 1-4 digit code at this location. If a code is programmed at this location you must enter in the code followed by the <#> button to kiss-off the alarm event.

FORCE TEST CALL DTMF CODE NUMBER

FORCE TEST CALL DTMF CODE NUMBER - P175E 15E (Value 1-4 digit code 0-9999)

If a user wishes to remotely force a test call from the panel to a monitoring company using the Contact ID test message, you can dial the panel and when it answers enter the code programmed at this location on the telephone. If a voice board is fitted you can assign a voice message (see P176E11E below) to indicate that the function was started. If no voice board is fitted but there is a DTMF IC fitted to the panel you will get 3 short beeps after the code is entered to indicate the function was started. Once you hang-up the phone the panel will then make a call to the monitoring company and send a manual test call message. If no code is programmed at this location (ie "0") the function will be disabled. The code can be a 1-4 digit number as required.

NOTE: If using this remote test code and any of the other remote DTMF codes at locations (P63E, P175E12E, P175E13E & P175E14E) you should make this code a 4 digit code to ensure the panel knows what function is being operated. If no other DTMF remote functions are being used this code can be a single digit.

It is also possible to force a locally generated test call from the panel keypad by pressing and holding the <CONTROL> button then <0> within two seconds of pressing control. This will force a test call to the monitoring company.

MISCELLANEOUS VOICE BOARD REPORT MESSAGES

KEYPAD or RADIO PANIC ALARM VOICE MESSAGE NUMBER -	P176E 1E (Value 0-99)
FIRE ALARM VOICE MESSAGE NUMBER -	P176E 2E (Value 0-99)
MEDICAL ALARM VOICE MESSAGE NUMBER -	P176E 3E (Value 0-99)
MAINS FAIL ALARM VOICE MESSAGE NUMBER -	P176E 4E (Value 0-99)
MAINS RESTORE VOICE MESSAGE NUMBER -	P176E 5E (Value 0-99)
BATTERY LOW ALARM VOICE MESSAGE NUMBER -	P176E 6E (Value 0-99)
BATTERY RESTORE VOICE MESSAGE NUMBER -	P176E 7E (Value 0-99)
TAMPER ALARMS VOICE MESSAGE NUMBER -	P176E 8E (Value 0-99)
DURESS ALARM VOICE MESSAGE NUMBER -	P176E 9E (Value 0-99)
LATCHKEY DISARM VOICE MESSAGE NUMBER -	P176E 10E (Value 0-99)
MANUAL TEST CALL INITIATED VOICE MESSAGE NUMBER -	P176E 11E (Value 0-99)

If a Voice Board is connected to the panel it is possible to send various alarm messages to identify the type of alarm If the above locations are programmed with a "0" then the event will not report in Voice or Domestic format.

TELEPHONE NUMBERS

TELEPHONE NUMBERS - P181E 1-8E (Value 1-16 digit number)

The Telephone Numbers can be up to 16 digits long. They can also include some special functions or characters as per the chart below.

LED KEYPAD BUTTON	LED KEYPAD INDICATION	LCD KEYPAD BUTTON	LCD KEYPAD CID & 4+2 INDICATIONS	LCD KEYPAD TELEPHONE INDICATIONS	CID & 4+2 SPECIAL CHARACTERS	TELEPHONE NUMBER SPECIAL FUNCTION
"BYPASS"	-	CONTROL & 0	-	DELETE #	DELETE #	DELETE #
"PANIC"	11	CONTROL & 2	B	#	"B"	"#"
"MEMORY"	12	CONTROL & 3	C	*	"C"	"*"
"CONTROL"	13	CONTROL & 4	D	-	"D"	"2.5 sec Pause"
"ARM"	14	CONTROL & 5	E	w	"E"	"Wait for 2nd Dial-tone"
"STAY"	15	CONTROL & 6	F	=	"F"	"5 sec Pause"

TELEPHONE NUMBER REPORT FORMATS

TELEPHONE NUMBER REPORT FORMATS - P182E 1-8E

Option 1 - Contact ID
Option 2 - Domestic Dial
Option 3 - Pager
Option 4 - Voice Dialler
Option 6 - 4 + 2 (Pulsed) 10 pps (1400 hz Handshake, 1900 hz transmit Tone)
Option 6 - 4 + 2 (Pulsed) 10 pps (2300 hz Handshake, 1800 hz transmit Tone)
Option 7 - 4 + 2 (Pulsed) 20 pps (1400 hz Handshake, 1900 hz transmit Tone)
Option 8 - 4 + 2 (Pulsed) 20 pps (2300 hz Handshake, 1800 hz transmit Tone)
Option 9 - 4 + 2 DTMF (with Checksum)

Option 1 **Contact ID** - If this option is set for the telephone number, the panel will send a Contact ID message to a Monitoring Station.

Option 2 **Domestic Dial** - If this option is set for the telephone number, the panel is expecting to dial a residential telephone number when an alarm occurs. The message sent consists of a siren tone over the phone to alert the person called that an alarm is in progress. The alarm can be cancelled by the person called by pressing the "#" button on a touch tone phone during the quiet period. If there is a code programmed at location P175E14E the alarm must be kissed off by entering in the code then "#". If the alarm is cancelled by a valid user code the dialler will stop any further calls. If Option 1 at P46E is turned on (use near and confirmed alarm reporting) the panel will not send an alarm in this format.

Option 3 **Pager** - Report alarm events using "Pager" format. This format utilizes Telecom's 026 pager network or other public subscriber networks, etc, to send numeric messages to a compatible pager. The panel sends a 12 digit numeric number to the pager consisting of the account code (P62E) the 3 digit CID event code for the alarm event and a 3 digit zone number to identify the zone in alarm.

Option 4 **Voice Dialler -** If the optional voice board is fitted to the panel then selecting this option for the telephone number will allow preset voice messages to be sent via the telephone following an alarm. The kiss off method to acknowledge the alarm message is the same as the Domestic Format. If Option 1 at P46E is turned on (use near and confirmed alarm reporting) the panel will not send an alarm in this format.

Option 5 **4 + 2 (10 pps) -** This option transmits a 4 digit account code followed by a 2 digit event code to a central monitoring station. The handshake tone from the monitoring station must be 1400 hz and the transmit tone from the panel will be at 1900hz at 10 pulses per second.

Option 6 **4 + 2 (10 pps) -** This option transmits a 4 digit account code followed by a 2 digit event code to a central monitoring station. The handshake tone from the monitoring station must be 2300 hz and the transmit tone from the panel will be at 1800hz at 10 pulses per second.

Option 7 **4 + 2 (20 pps) -** This option transmits a 4 digit account code followed by a 2 digit event code to a central monitoring station. The handshake tone from the monitoring station must be 1400 hz and the transmit tone from the panel will be at 1900hz at 20 pulses per second.

Option 8 **4 + 2 (20 pps) -** This option transmits a 4 digit account code followed by a 2 digit event code to a central monitoring station. The handshake tone from the monitoring station must be 2300 hz and the transmit tone from the panel will be at 1800hz at 20 pulses per second

Option 9 **4 + 2 (DTMF) -** This option transmits a 4 digit account code followed by a 2 digit event code plus a checksum using DTMF signals to a central monitoring station. The handshake tone from the monitoring station must be 1400 hz /2300 hz .

TELEPHONE NUMBER REPORT OPTIONS

TELEPHONE NUMBER REPORT OPTIONS - P183E 1-8E

Option 1 - Stop Dialling if Kissed Off
Option 2 - Monitor Call Progress
Option 3 - Blind Dial
Option 4 - Use Group Numbers for Contact ID Reporting
Option 5 - Spare
Option 6 - Auto Kiss-off for Voice/Domestic Reporting
Option 7 - Use the Dial Pre-fix Number
Option 8 - Used as the Call-back Number

Option 1 **Stop if Kissed Off -** If this option is turned on for the telephone number, the dialler will stop sending the alarm if the signal is kissed off and will not proceed with any other telephone numbers for that event. If not kissed off the dialler will start dialling any other programmed numbers. If the event is not kissed off from any of the telephone numbers and the maximum re-tries limit is reached then the event is marked as unsent and will be added to the next event that causes the dialler to report. If this option is off, the dialler will send the event for the maximum re-tries count or until kissed off but it will then proceed to report the same event to any other telephone numbers programmed.

Option 2 **Monitor Call Progress -** Monitor call progress means that the dialler monitors the status of the dialling tones to determine whether the call is valid or not. If the call is not valid, eg engaged, the panel will know and hang up the call and try again.

Option 3 **Blind Dial** - When the dialler makes a call it looks for dial tone before making the call. If no dial tone is detected the panel hangs up and attempts another call. The panel will do this 3 times and if dial tone is still not detected it will make the call anyway. If blind dial is on, the panel skips the dial tone detection and dials 4 seconds after looping the line (used where non standard or low level dial tone exists).

Option 4 **Use Group Numbers for Contact ID Reporting -** When sending an alarm using Contact ID, the panel can send separate account codes to report the two areas or, use one account code (P62E1E Area A) and use the group number to identify the two areas. Turning this option on sends one account with group numbers.

Option 5 **Spare -**

Option 6 **Auto Kiss-off for Voice/Domestic reporting -** If Voice or Domestic Report Format is used and this option is turned On, the alarm will be reported and it can be kissed off by entering the kiss-off code (P175E14E) at the telephone but if not kissed off the event is automatically removed from the dialler buffer once the maximum dial re-tries has been reached for the telephone number. A new event must then be created before the dialler will dial again.

Option 7 **Use the Dial Pre-fix Number -** If the Telephone number does not provide sufficient digits for dialling

purposes it is possible to program a dial pre-fix number (P175E8E). The pre-fix can be dialled before the telephone number. Turning this option on dials the pre-fix first followed by the telephone number.

Option 8 **Used as the Call-back Number -** Any of the 8 telephone numbers can be designated as the Call-back number. A Call-back number is normally used to allow the panel to dial a preset number and connect to a modem for upload/download purposes.

MAXIMUM DIAL RE-TRIES per TELEPHONE NUMBER

MAXIMUM DIAL RE-TRIES per TELEPHONE NUMBER - P184E 1-8E (Value 0-99)

The maximum dial re-tries is the number of times that the panel will dial a telephone number in an attempt to get kissed-off.

DIALLER REPORTING OPTIONS "A"

DIALLER REPORTING OPTIONS "A" - P186E 1-8E

Option 1 - Report Mains Fail
Option 2 - Report Battery Low
Option 3 - Report Radio Battery Low
Option 4 - Report Line Fail
Option 5 - Report System Tamper
Option 6 - Report Keypad Tamper
Option 7 - Report Zone Tamper
Option 8 - Report Radio Zone Tamper

Option 1 **Report Mains Fail -** If this option is on the panel will report a Mains fail after the report delay time (P25E6E) has expired.

Option 2 **Report Battery Low -** If this option is on the panel will report a Battery Low.

Option 3 **Report Radio Battery Low -** If this option is on the panel will report a Battery Low from any radio zones that have the battery status monitored.

Option 4 **Report Line Fail -** If this option is on the panel will report a Telephone Line fail. The panel will send the line fail and the line restore at the same time.

Option 5 **Report System Tamper -** If this option is on the panel will report a Tamper Alarm on the panel tamper input.

Option 6 **Report Keypad Tamper -** If this option is on the panel will report a Tamper Alarm from a keypad fitted with a tamper switch or a wrong code alarm from a keypad.

Option 7 **Report Radio Zone Tamper -** If this option is on the panel will report a Radio Zone Tamper Alarm.

DIALLER REPORTING OPTIONS "B"

DIALLER REPORTING OPTIONS "B" - P187E 1-8E

Option 1 - Report Duress
Option 2 - Report Supervised Radio Alarm
Option 3 - Report Zone Inactivity Alarm
Option 4 - Report Manual Panic Alarm
Option 5 - Report Manual Fire Alarm
Option 6 - Report Manual Medical Alarm
Option 7 - Report Radio Pendant Panic Alarm
Option 8 - Report Zone Bypasses

Option 1 **Report Duress -** If this option is on the panel will report a Duress Alarm (see P25E2E).

Option 2 **Report Supervised Radio Alarm -** If this option is on the panel will report a Supervised radio Alarm (see P25E4E).

Option 3 **Report Zone Inactivity Alarm -** If this option is on the panel will report a Zone Inactivity (Sensor-watch) Alarm (see P163E).

Option 4 **Report Manual Panic Alarm -** If this option is on the panel will report a Keypad generated Panic Alarm.

Option 5 **Report Manual Fire Alarm -** If this option is on the panel will report a Keypad generated Fire Alarm.

Option 6 **Report Manual Medical Alarm -** If this option is on the panel will report a Keypad generated Medical Alarm.

Option 7 **Report Radio Pendant Panic Alarm -** If this option is on the panel will report a Panic Alarm generated by a radio key (pendant).

Option 8 **Report Zone Bypasses -** If this option is on the panel will report a Manual or Auto Bypass on a zone.

DIALLER REPORTING OPTIONS "C"

DIALLER REPORTING OPTIONS "C" - P188E 1-8E

Option 1 - Report Arm/Disarm
Option 2 - Report Stay Mode Arm/Disarm
Option 3 - Report Disarm only after an Alarm
Option 4 - Report Stay Mode Disarm only after an Alarm
Option 5 - Report Stay Mode Zone Alarms
Option 6 - Report Access to Program Mode
Option 7 - Report 24 Hour Alarms for Domestic/Voice Formats
Option 8 - Report Zone Restores

Option 1 **Report Arm/Disarm -** If this option is on then all Arm/Disarm signals will be reported to a Monitoring Station if Contact ID or 4 + 2 is set as the reporting format.

Option 2 **Report Stay Mode Arm/Disarm -** If this option is on then all Stay Mode Arm/Disarm signals will be reported to a Monitoring Station if Contact ID or 4 + 2 is set as the reporting format.

Option 3 **Send Disarm only after an Alarm** - If this option is on, the panel will not normally send an Arm/Disarm signal to the monitoring company, however, if a zone alarm occurs then the panel will send a Disarm following the disarming of the panel to show it has been turned off by a valid user.

Option 4 **Send Stay Mode Disarm only after an Alarm -** If this option is on, the panel will not normally send a Stay Mode Arm/Disarm signal to the monitoring company, however, if a zone alarm occurs then the panel will send a Stay Mode Disarm following the disarming of the panel to show it has been turned off by a valid user.

Option 5 **Report Stay Mode Zone Alarms -** If this option is on, the panel will report zone alarms in Stay Mode.

Option 6 **Report Access to Program Mode** - If this option is on the panel will report a Contact ID code to indicate that either Client or Installer program Modes have been accessed.

Option 7 **Report 24 Hour Alarms for Domestic/Voice Formats -** When the panel is set to send alarms via domestic or voice mode, No alarms will normally be sent for 24 hour zones. If 24 hour alarms are required to be reported in Domestic/Voice mode then this option must be turned on.

Option 8 **Report Zone Restores** - If this option is on the panel will report all zone restores in Contact ID or 4 + 2 formats. If this option is turned off the panel will only report the alarms.

DIALLER REPORTING OPTIONS “D”

DIALLER REPORTING OPTIONS “D” - P189E 1-8E

Option 1 - Report Latchkey Disarm
Option 2 - Report Delinquency Alarm
Option 3 - Report Test Calls
Option 4 - Report Fuse Failure
Option 5 - Report Output 1 or 2 Fail
Option 6 - Spare
Option 7 - Spare
Option 8 - Spare

Option 1 **Report Latchkey Disarm -** If the panel is armed in Latchkey Report Mode by using a Code, Key-switch, <ARM>, <STAY>, <A> or <B> buttons, any code or key-switch without the Latchkey option (P4E or P122E Option 6 off) used to Disarm the Alarm will cause a Disarm report to be sent via the dialler. Normally the report format for the telephone number would be set to Domestic or Voice reporting.

Option 2 **Report Delinquency Alarm -** If the panel has been configured for Delinquency monitoring (P67E) and an area has not been armed for the time set at P67E, a Delinquency Alarm will be sent to the Monitoring Station if Contact ID or 4 + 2 is set as the reporting format.

Option 3 **Send Test Calls** - If Contact ID or 4 + 2 formats are used for reporting alarm, the panel can also send Automatic test calls. If this option is turned on the test calls will be sent but if test calls are not required they can be disabled by turning this option off.

Option 4 **Report Fuse Failure -** The panel has two on-board thermal fuses designed to protect the 12v DC outputs from short circuits. If this option is on and either of these fuses are open, a report will be sent to the monitoring station if Contact ID is set as the reporting format.

Option 5 **Report Output 1 or 2 Fail -** The panel has two high current Outputs (O/P 1 & 2). These Outputs are normally used to drive sirens or strobes for local alarm warning. If option 8 at location P37E is on for either O/P 1 or 2 the Output status will be monitored (eg wire to siren has been cut). If this option is on and a fault is detected on the output, a report will be sent to the monitoring station if Contact ID is set as the reporting format

CALL DIVERT TRIGGER EVENTS

CALL DIVERT TRIGGER EVENTS - P192E 1-2E (1 = Area A Trigger Events, 2 = Area B Trigger Events)

Option 1 - Divert on Arm
Option 2 - Divert on Disarm
Option 3 - Divert on Stay Mode Arm
Option 4 - Divert on Stay Mode Disarm
Option 5 - Divert on Key-switch Arm/Disarm
Option 6 - Divert on Time-zone Arm/Disarm
Option 7 - Divert on DTMF or PC Arm/Disarm
Option 8 - Divert on single button <ARM> or <STAY>

Option 1 **Divert Arm -** If this option is on then the Call-Divert On number (P194E1E) will be dialled when the system is Armed. The User Code must have call divert assigned at P4E option 7 for it to happen. If a User Code does not have option 7 on at P4E the call divert number will not be dialled (used for cleaner codes and others who should not be able to remove the call divert function).

Option 2 **Divert on Disarm -** If this option is on then the Call-Divert Off number (P194E2E) will be dialled when the system is Disarmed. The User Code must have call divert assigned at P4E option 7 for it to happen. If a User Code does not have option 7 on at P4E the call divert number will not be dialled (used for cleaner codes and others who should not be able to remove the call divert function).

Option 3 **Divert on Stay Mode Arm -** If this option is on then the Call-Divert On number (P194E1E) will be dialled when the system is Armed in Stay Mode. The User Code Must have call divert assigned at P4E option 7 for it to happen. If a User Code does not have option 7 on at P4E the call divert number will not be dialled (used for cleaner codes and others who should not be able to remove the call divert function).

Option 4 **Divert on Stay Mode Disarm -** If this option is on then the Call-Divert Off number (P194E2E) will be dialled when the system is Stay Mode Disarmed. The User Code must have call divert assigned at P4E option 7 for it to happen. If a User Code does not have option 7 on at P4E the call divert number will not be dialled (used for cleaner codes and others who should not be able to remove the call divert function).

Option 5 **Divert on Key-switch Arm/Disarm -** If this option is on then the Call-Divert On and Off numbers (P194E1E & 2E) will be dialled when the system is Armed or Disarmed with the key-switch.

Option 6 **Divert on Time-zone Arm/Disarm -** If this option is on then the Call-Divert On and Off numbers (P194E1E & 2E) will be dialled when the system is Armed or Disarmed by a Time-zone.

Option 7 **Divert on DTMF or PC Arm/Disarm -** If this option is on then the Call-Divert On and Off numbers (P194E1E & 2E) will be dialled when the system is Armed or Disarmed by a Remote DTMF code or by a PC connection.

Option 8 **Divert on single button <ARM> or <STAY> -** If this option is on then the Call-Divert On number (P194E1E) will be dialled when the system is Armed with the <ARM> or <STAY> buttons. This option must be selected if the Call Divert function is required and single button arming is being used.

DIVERT NUMBER DIAL OPTIONS

DIVERT NUMBER DIAL OPTIONS - P193E 1-2E (1 = Divert ON Number, 2 = Divert OFF number)

Option 1 - Spare
Option 2 - Spare
Option 3 - Blind Dial
Option 4 - Spare
Option 5 - Spare
Option 6 - Spare
Option 7 - Use the Dial Pre-fix Number
Option 8 - Spare

Option 1 **Spare**

Option 2 **Spare**

Option 3 **Blind Dial** - When the dialler makes a divert call it looks for dial tone before making the call. If no dial tone is detected the panel hangs up and attempts another call. The panel will do this 3 times and if dial tone is still not detected it will make the call anyway. If blind dial is on, the panel skips the dial tone detection and dials 4 seconds after looping the line (used where non standard or low level dial tone exists).

Option 4 **Spare**

Option 5 **Spare**

Option 6 **Spare**

Option 7 **Use the Dial Pre-fix Number -** If the Divert number does not provide sufficient digits for dialling purposes it is possible to program a dial pre-fix number (P175E8E). The pre-fix can be dialled before the divert number. Turning this option on dials the pre-fix first followed by the divert number.

Option 8 **Spare**

DIVERT NUMBER

DIVERT NUMBER - P194E 1-2E (Value 1-16 digits) (1 = Divert ON Number, 2 = Divert OFF number)

The call divert numbers are programmed at this location. They are the numbers that must be dialled to turn the divert On or Off. Option 1 is the number to turn call divert on and Option 2 is the call divert off number.

+++++4+2 Program Options+++++

When using the 4+2 Reporting Format the two digit report code can be changed if desired at the locations below. Also the two digit codes can include the numbers 0-9 as well the special characters B,C,D,E & F. The chart below shows how to program the special 4+2 characters.

LED KEYPAD BUTTON	LED KEYPAD INDICATION	LCD KEYPAD BUTTON	LCD KEYPAD CID & 4+2 INDICATIONS	LCD KEYPAD TELEPHONE INDICATIONS	CID & 4+2 SPECIAL CHARACTERS	TELEPHONE NUMBER SPECIAL FUNCTION
"BYPASS"	-	CONTROL & 0	-	DELETE #	DELETE #	DELETE #
"PANIC"	11	CONTROL & 2	B	#	"B"	"#"
"MEMORY"	12	CONTROL & 3	C	*	"C"	"*"
"CONTROL"	13	CONTROL & 4	D	-	"D"	"2.5 sec Pause"
"ARM"	14	CONTROL & 5	E	w	"E"	"Wait for 2nd Dial-tone"
"STAY"	15	CONTROL & 6	F	=	"F"	"5 sec Pause"

ARMED by USER 4+2 CODE

ARMED by USER 4+2 CODE - P16E 1-100E User Number (Value 00-FF)

DISARMED by USER 4+2 CODE

DISARMED by USER 4+2 CODE - P17E 1-100E User Number (Value 00-FF)

ZONE ALARM 4+2 CODE

ZONE ALARM 4+2 CODE - P147E 1-16E Zone Number (Value 00-FF)

ZONE ALARM RESTORE 4+2 CODE

ZONE ALARM RESTORE 4+2 CODE - P148E 1-16E Zone Number (Value 00-FF)

ZONE NEAR ALARM 4+2 CODE

ZONE NEAR ALARM 4+2 CODE - P149E 1-16E Zone Number (Value 00-FF)

ZONE NEAR ALARM RESTORE 4+2 CODE

ZONE NEAR ALARM RESTORE 4+2 CODE - P150E 1-16E Zone Number (Value 00-FF)

ZONE VERIFIED ALARM 4+2 CODE

ZONE VERIFIED ALARM 4+2 CODE - P151E 1-16E Zone Number (Value 00-FF)

ZONE VERIFIED ALARM RESTORE 4+2 CODE

ZONE VERIFIED ALARM RESTORE 4+2 CODE - P152E 1-16E Zone Number (Value 00-FF)

ZONE BYPASS 4+2 CODE

ZONE BYPASS 4+2 CODE - P155E 1-16E Zone Number (Value 00-FF)

ZONE BYPASS RESTORE 4+2 CODE

ZONE BYPASS RESTORE 4+2 CODE - P156E 1-16E Zone Number (Value 00-FF)

MAINS FAIL 4+2 CODE

MAINS FAIL 4+2 CODE - P195E 1E (Value 00-FF)

MAINS FAIL RESTORE 4+2 CODE

MAINS FAIL RESTORE 4+2 CODE - P195E 2E (Value 00-FF)

BATTERY LOW 4+2 CODE

BATTERY LOW 4+2 CODE - P195E 3E (Value 00-FF)

BATTERY LOW RESTORE 4+2 CODE

BATTERY LOW RESTORE 4+2 CODE - P195E 4E (Value 00-FF)

SYSTEM TAMPER 4+2 CODE

SYSTEM TAMPER 4+2 CODE - P195E 5E (Value 00-FF)

SYSTEM TAMPER RESTORE 4+2 CODE

SYSTEM TAMPER RESTORE 4+2 CODE - P195E 6E (Value 00-FF)

DTMF or PC ARM 4+2 CODE

DTMF or PC ARM 4+2 CODE - P195E 7E (Value 00-FF)

DTMF or PC DISARM 4+2 CODE

DTMF or PC DISARM 4+2 CODE - P195E 8E (Value 00-FF)

DURESS ALARM 4+2 CODE

DURESS ALARM 4+2 CODE - P195E 9E (Value 00-FF)

AUTOMTIC TEST CALL 4+2 CODE

AUTOMATIC TEST CALL 4+2 CODE - P195E 10E (Value 00-FF)

ARMED by <ARM> BUTTON 4+2 CODE

ARMED by <ARM> BUTTON 4+2 CODE - P195E 11E (Value 00-FF)

STAY MODE ARM 4+2 CODE

STAY MODE ARM 4+2 CODE - P195E 12E (Value 00-FF)

DISARMED by <ARM> or <STAY> BUTTON 4+2 CODE

DISARMED by <ARM> or <STAY> BUTTON 4+2 CODE - P195E 13E (Value 00-FF)

ARMED by KEY-SWITCH 4+2 CODE

ARMED by KEY-SWITCH 4+2 CODE - P195E 14E (Value 00-FF)

DISARMED by KEY-SWITCH 4+2 CODE

DISARMED by KEY-SWITCH 4+2 CODE - P195E 15E (Value 00-FF)

FAIL to ARM by TIME-ZONE 4+2 CODE

FAIL to ARM by TIME-ZONE 4+2 CODE - P195E 16E (Value 00-FF)

“PANIC” ALARM 4+2 CODE

“PANIC” ALARM 4+2 CODE - P195E 17E (Value 00-FF)

“PANIC” ALARM RESTORE 4+2 CODE

“PANIC” ALARM RESTORE 4+2 CODE - P195E 18E (Value 00-FF)

“FIRE” ALARM 4+2 CODE

“FIRE” ALARM 4+2 CODE - P195E 19E (Value 00-FF)

“FIRE” ALARM RESTORE 4+2 CODE

“FIRE” ALARM RESTORE 4+2 CODE - P195E 20E (Value 00-FF)

“MEDICAL” ALARM 4+2 CODE

“MEDICAL” ALARM 4+2 CODE - P195E 21E (Value 00-FF)

“MEDICAL” ALARM RESTORE 4+2 CODE

“MEDICAL” ALARM RESTORE 4+2 CODE - P195E 22E (Value 00-FF)

PANEL SOFTWARE VERSION NUMBER

PANEL SOFTWARE VERSION NUMBER - P200E 1E

This location will display the software version of the panel.

KEYPAD ADDRESS NUMBER

KEYPAD ADDRESS NUMBER - P200E 2E

This location will display the keypad number of the keypad currently in program mode.

AREAS ASSIGNED to the KEYPAD

AREAS ASSIGNED to the KEYPAD - P200E 3E

This location will display the Areas assigned to the keypad currently in program mode.

DISPLAY TIME-ZONES CURRENTLY ACTIVE

DISPLAY TIME-ZONES CURRENTLY ACTIVE - P200E 4E

This location will display which of the 8 Time-zones are currently on.

DISPLAY BATTERY VOLTAGE

DISPLAY BATTERY VOLTAGE - P200E 5E

This location will display the system battery voltage measured by the panel.

WALK TEST MODE

WALK-TEST MODE - P200E 6E

This address is used to start walk-test mode while in installer or client program mode. By pressing P200E6E at the keypad, the keypad buzzer will beep at 1 second intervals to indicate walk-test mode is active. If a siren is connected to an Output and that output has option 1 turned on at location P36E the siren will give a 1 second beep every time a zone is triggered while walk-test mode is active. By walking past all of the detectors connected to the system and activating them, the associated zone will latch up at the keypad to allow verification that all zones are working properly. By pressing the <Program> or <Enter> button, walk-test mode will be terminated and the panel will leave program mode. The results of the walk-test will be saved in the memory event buffer and can be viewed by accessing memory display mode to verify which detectors were triggered during walk-test mode. If Output 1 or 2 are used for the Audible walk-test indication and a horn speaker is connected to the output (see P37E1 or 2E option 1), the siren on the output will give a single tone for the chirp instead of the swept tone used for alarms.

WRITE TO EEPROM (DTU) BOARD

WRITE to EEPROM[DTU] BOARD - P200E 7E

This location is used to copy the panels program configuration to an external EEPROM memory card (DTU-Data Transfer Unit) which can be plugged into the expansion socket on the control board. The write protect link on the DTU board must be ON for the data to be transferred.

READ FROM EEPROM (DTU) BOARD

READ from EEPROM[DTU] BOARD - P200E 8E

This location is used to return the panels program configuration from an external EEPROM memory card (DTU-Data Transfer Unit) which can be plugged into the expansion socket on the control board.

DEFAULT CODES & TELEPHONE NUMBERS

DEFAULT CODES & TELEPHONE NUMBER - P200E 9E

This location is used to return the panels User and Installer Codes plus the Telephone Numbers & Account Codes to the default settings.

DEFAULT ALL PROGRAMMING TO FACTORY SETTINGS

DEFAULT ALL PROGRAMMING TO FACTORY SETTINGS - P200E 10E

This location is used to return the panels User and Installer Codes plus the Telephone Numbers & Account Codes to the default settings.

CLEAR ALARM MEMORY BUFFER

CLEAR ALARM MEMORY BUFFER - P200E 11E

This location is used to clear ALL of the events stored on memory.

INITIATE A CALL to the CALL-BACK NUMBER

INITIATE A CALL to the CALL-BACK NUMBER - P200E 12E

This location is used to force a call to the call-back number..

ELITE S PROGRAM SUMMARY GUIDE

The following program summary is an abbreviated version of all the panel program addresses. This is intended as a quick guide to finding a program address. In many address locations, there is a main address (e.g. "*P1E*"), then a sub address (e.g. P1E "*1E*"). You must enter in the main address number, followed by the sub address, then you can enter the actual data. The program addresses are in numerical order with page references beside them so you can get more detailed information if required. This Summary is split into 11 headings. These are;

1) Users - Page 93
2) Miscellaneous Panel & Clock Settings - Page 95
3) Outputs - Page 96
4) Areas - Page 97
5) Keypads - Page 98
6) Key-Switches - Page 101
7) Zones - Page 102
8) Time Zones - Page 106
9) Dialler - Page 106
10) Telephone Numbers - Page 108
11) Miscellaneous 4+2 Program Options - Page 109
12) Panel Diagnostic & Default Options - Page 110

++++++Users++++++

Programming User Codes

P1E **1-100E** **User Code 1-100 -** Default for User Code # 1 (P1E1E) = 123 Codes can be 1-6 or 4-6 digits. Page 37

(where 1E = User Code #1 to 100E = User Code #100)

NOTE: The 100 Users can be keypad Code, Radio or Access key Users. They can be mixed but the Maximum is 100 Users.
The User type MUST be set to "0" (P2E User# E) for a code to be entered at the above address.

User Type (Code/Radio/Access Tag-Card)

P2E **1-100E** **User # 1-100 Type -** Page 37
(Default = 0)

0 = Keypad Code User {PIN}
1 = Radio User (Users 21-100 only)
2 = Access Tag/Card User
3 = Both Code and Access Tag/Card User {Tag + PIN}
4 = Either Code or Access Tag/Card User {Tag or PIN}

User Area Assignment

P3E **1-100E** **User # 1-100 Area -** Page 38
(Default = 1)

1 = Assigned to Area "A"
2 = Assigned to Area "B"

User Code Access Options

P4E **1-100E** **Users 1-100 Access Options** (Default 1-4) Page 38
(Default = 1,3,4)

1 = Code can Arm Area
2 = Code can arm Stay Mode
3 = Code can Disarm Area
4 = Code can disarm Stay Mode
5 = Code is a Security Guard Code
6 = Code will Arm Latchkey Mode
7 = Call Divert Code
8 = Spare

User Code Privileges

P5E **1-100E** **Users 1-100 Privileges** Page 39
(Default User 1 = 2,3,4,5,6,7,8)
(Default User 2-100 = All Off)

1 = User can Change their Code
2 = User can Change All Codes
3 = User can Allow Access to Installer Mode/Edit all Codes
4 = User can Change Telephone Numbers
5 = User can Change the Clock
6 = User can Change DTMF Command Codes
7 = User can Learn New Radio Devices
8 = User can Force a Download to Callback Number

Radio User Type

P7E **21-100E** **Radio User 21-100 Type** Page 39
(Default = 0)

0 = General Pendant Type
1 = Crow Freelink Pendant
21 = Ness Pendant

Radio User Privileges

P8E **21-100E** **Radio Users 21-100 Privileges** Page 40
(Default = 1)

1 = Pendant Can Disarm at All Times
2 = Pendant Causes Immediate Panic
3 = Pendant Causes Delayed Panic (1.5 Sec)
4 = Spare
5 = Spare
6 = Spare
7 = Spare
8 = Spare

Time Zone Assigned to a User

P9E **1-100E** **Time Zone to User # 1-100** Page 40
(Default = All Off)

1 = User Controlled by Time Zone # 1
2 = User Controlled by Time Zone # 2
3 = User Controlled by Time Zone # 3

4 = User Controlled by Time Zone # 4
5 = User Controlled by Time Zone # 5
6 = User Controlled by Time Zone # 6
7 = User Controlled by Time Zone # 7
8 = User Controlled by Time Zone # 8

User to Keypad Assignment

P10E **1-100E** **User # 1-100 Keypad Assignment** Page 40
(Default = All On)

1 = Can Operate at Keypad # 1
2 = Can Operate at Keypad # 2
3 = Can Operate at Keypad # 3
4 = Can Operate at Keypad # 4
5 = Can Operate at Keypad # 5
6 = Can Operate at Keypad # 6
7 = Can Operate at Keypad # 7
8 = Can Operate at Keypad # 8

Radio Pendant Panic Beeps to Keypad

P11E **21-100E** **Radio # 21-100 Panic Beep to Keypad** Page 41
(Default = All On)

1 = A Radio panic will Beep at Keypad # 1
2 = A Radio panic will Beep at Keypad # 2
3 = A Radio panic will Beep at Keypad # 3
4 = A Radio panic will Beep at Keypad # 4
5 = A Radio panic will Beep at Keypad # 5
6 = A Radio panic will Beep at Keypad # 6
7 = A Radio panic will Beep at Keypad # 7
8 = A Radio panic will Beep at Keypad # 8

Users to Output Mask

P12E **1-100E** **User # 1-100 to Output Mask** Page 41
(Default = All Off)

1 = User is Mapped to Output # 1
2 = User is Mapped to Output # 2
3 = User is Mapped to Output # 3
4 = User is Mapped to Output # 4
5 = User is Mapped to Output # 5
6 = User is Mapped to Output # 6
7 = User is Mapped to Output # 7
8 = User is Mapped to Output # 8

User can Turn an Output On

P13E **1-100E** **User # 1-100 Can Turn On an Output** Page 41
(Default = All Off)

1 = User Can Turn on Output # 1
2 = User Can Turn on Output # 2
3 = User Can Turn on Output # 3
4 = User Can Turn on Output # 4
5 = User Can Turn on Output # 5
6 = User Can Turn on Output # 6
7 = User Can Turn on Output # 7
8 = User Can Turn on Output # 8

User can Turn an Output Off

P14E **1-100E** **User # 1-100 Can Turn Off an Output** Page 42
(Default = All Off)

1 = User Can Turn off Output # 1
2 = User Can Turn off Output # 2
3 = User Can Turn off Output # 3
4 = User Can Turn off Output # 4
5 = User Can Turn off Output # 5
6 = User Can Turn off Output # 6
7 = User Can Turn off Output # 7
8 = User Can Turn off Output # 8

Radio Pendant Panic Alarm to an Output

P15E **21-100E** **Radio # 21-100 Panic Alarm to an O/P** Page 42
(Default = 1,2)

1 = Radio panic to Output # 1
2 = Radio panic to Output # 2
3 = Radio panic to Output # 3
4 = Radio panic to Output # 4
5 = Radio panic to Output # 5
6 = Radio panic to Output # 6
7 = Radio panic to Output # 7
8 = Radio panic to Output # 8

Armed by User # 4+2 Reporting Code

P16E **1-100E** **4+2 Arm Code for Users 1-100** Page 88

Disarmed by User # 4+2 Reporting Code

P17E **1-100E** **4+2 Disarm Code for Users 1-100** Page 88

Learn Radio Pendant Codes

P18E **21-100E** **Learn Radio Pendant Codes for Users 21-100** Page 42
(applies if the User Type, P2E, is set to 1)

Delete a Specific Radio Pendant Code

P19E **21-100E** **Delete a Specific Radio Pendant Code for Users 21-100** Page 43
(applies if the User Type, P2E, is set to 1)

Find Radio Pendant memory Location

P20E **0E** **Enter this address then operate the Radio Pendant to find its user #** Page 43
(applies if the User Type, P2E, is set to 1). Only press 0E when using LED Keypad.

Learn Access Tag/Card Codes

P21E **1-100E** **Learn Access Tag/Card Codes for Users 1-100** Page 43
(applies if the User Type, P2E, is set to 2, 3 or 4)

Delete a Specific Access Tag/Card Code

P22E **1-100E** **Delete a Specific Access Tag/Card Code for Users 1-100** Page 43
(applies if the User Type, P2E, is set to 2, 3 or 4)

Find an Access Tag/Card memory Location

P23E **0E** **Enter this address then operate the Access Tag/Card to find its user #** Page 43
(applies if the User Type, P2E, is set to 2, 3 or 4). Only press 0E when using LED Keypad.

+++++Miscellaneous Panel & Clock Settings+++++

Installer Code

P25E **1E** **Installer Code -** (Default = 000000) Page 44

Duress Digit

P25E **2E** **Duress Digit -** Value 1-9 (Default = 0 Duress Function Disabled) Page 44

Dial Report Delay

P25E **3E** **Dial Report Delay -** Value 0-255 seconds (Default = 0) Page 44

Radio Detector Supervised Timer

P25E **4E** **Radio Detector Supervised Timer -** 0-9999 Minutes (Default = 240 Minutes [4 Hours]) Page 44

Two Trigger Timer

P25E **5E** **Two Trigger Timer -** Value 0-255 Seconds (Default = 60 Sec) Page 44

Mains Fail Reporting Delay

P25E **6E** **Mains Fail Reporting Delay -** Value 0-9999 Seconds (Default = 600 Sec) Page 44

Receiver Fail Delay

P25E **7E** **Receiver Fail Delay -** Value 0-9999 Seconds (Default = 0 Sec-Disabled) Page 44

Upload/Download Site Code Number

P25E **8E** **Upload/Download Site Code Number -** Up to 8 Characters (Default = None) Page 45

Temporary Output Disable

P25E **9E** **Temporary Output Disable -** Output 1-8 Page 45

Miscellaneous Panel Options

P25E **10E** **Misc. Panel Options** **Miscellaneous Options** Page 45
(Default = 2,6)
1 = Panel Tamper is 2k2 EOL
2 = Direct access to program mode for the installer code.
3 = Disable Mains Fail Test
4 = Listen-in to O/P # 1 Low Volume
5 = Receiver Fail Lockout
6 = Send output information to keypad bus
7 = Cannot arm if the system battery is low
8 = Installer Lockout

Installer Options

P25E **11E** **Installer Options** Page 46
(Default = All Off)
1 = Entry to installer mode resets confirmed alarms
2 = Entry to installer mode resets tamper alarms
3 = Entry to installer mode resets low battery alarms
4 = Entry to installer mode resets supervisory alarms
5-7 = Spare
8 = User Codes Must be 4-6 digits long

User Options

P25E **12E** **User Options (NOTE: This Option can ONLY be accessed from Client Mode)** Page 46
(Default = All Off) 1 = Hide User Codes from Installer

Setting Real Time Clock

P26E **1E** **Real Time Hour/Minute -** Value 0-2359 Page 47
P26E **2E** **Real Time Day of Week -** Value 1-7 (1=Sunday, 2=Monday ,etc)
P26E **3E** **Real Time Date/Month/Year -** Value DDMMYY (eg 020904 = 2nd Sept 2004)
P26E **4E** **Daylight Saving is Active** (If LED #1 is On, Daylight Saving is currently active) Turn this bit ON if you are in Daylight Saving Time when the panel is installed.

Daylight Saving settings

P27E	**1E**	**Daylight Saving Start Sunday** - Value 0-5 - Default = 1 (0=daylight saving start time disabled)	Page 47
	2E	**Daylight Saving End Sunday** - Value 0-5 - Default = 3 (0=daylight saving end time disabled)	
P28E	**1E**	**Daylight Saving Start Month** - Value 1-12 - Default = 10	
	2E	**Daylight Saving End Month** - Value 1-12 - Default = 3	
P29E	**1E**	**Daylight Saving Start Hour** - Value 0-23 - Default = 2	
	2E	**Daylight Saving End Hour** - Value 0-23 - Default = 2	

++++++Outputs++++++

Programming Output Options "A"

P34E	**1-8E**	**Options "A" for Outputs 1-8** (Default = All Off)	1 = Invert Output 2 = Flash Output 3 = Single Pulse to Output 4 = Lockout Output 5 = DTMF Remote Control can operate Output 6 = User Can operate this Output 7 = "Control" button Can Operate Output 8 = Chime Alarms will Flash this Output (linked to Pulse Timer)	Page 48

Programming Output Options "B"

P35E	**1-8E**	**Options "B" for Outputs 1-8** (Default O/P's 1&2 = 7) (Default O/P's 3-8 = All Off)	1 = Mains Fail to Output (Operates when P25E6E time expires) 2 = Fuse Failure to Output 3 = Battery Low to output 4 = Telephone Line Failure to Output 5 = Supervised Radio Signal Failure 6 = Sensor-Watch Alarm 7 = System Tamper to Output 8 = Receiver Fail	Page 48

Programming Output Options "C"

P36E	**1-8E**	**Options "C" for Outputs 1-8** (Default = All Off)	1 = Walk Test Pulse to Output 2 = Pulse Output every 5 seconds when Disarmed 3 = Pulse Output on Kiss-off Following Arming 4 = Spare 5 = Spare 6 = Spare 7 = Spare 8 = Spare	Page 49

Programming Output Options "D"

P37E	**1-8E**	**Options "D" for Outputs 1-8** (Default = All Off)	1 = Siren Driver to Output (requires a horn speaker, outputs 1&2) 2 = Output reset timer is minutes (clear for seconds) 3 = Output 'silenced' for 10 seconds on key-press if alarm 4 = 5 = 6 = 7 = 8 = Monitored Output (can tell if siren cable is cut, outputs 1&2 only)	Page 49

Output ON Delay Time

P38E	**1-8E**	**Output 1-8 ON Delay Time -** 0-9999 Seconds (Default = 0 Sec)	Page 50

Output Pulse Time

P39E	**1-8E**	**Output 1-8 Pulse Time -** 0-255;1/10th Sec increments (Default =2 which is 0.2 sec)	Page 50

Output Reset Time

P40E	**1-8E**	**Output 1-8 Reset Time -** 0-9999 Seconds (Default = 300 Sec) (if option 2 at P37E is on the reset time is in minutes)	Page 50

Output Chime Mode Time

P41E	**1-8E**	**Output 1-8 Chime Timer -** 0-255;1/10th Sec increments (Default =10 which is 1 sec)	Page 50

Start of Output "Command Control" Status Messages

P42E	**1-8E**	**Start message Number for Outputs 1-8 "Command Control" -** 0-99 (Default = 0)	Page 50

Un-Map an Output

P43E	**1-8E**	**Un-map Outputs 1-8 (remove ALL Defaults from an Output)**	Page 50

Assigning a Time-zone to an Output

P44E	**1-8E**	**Time-zones that will control Outputs 1-8** - Value = Time-zone 1-8 (Default = All Off)	Page 50

+++++Areas+++++

Area "A" & "B" Options A

P45E **1-2E** **Area A&B Options A** Page 51
(1=Area "A") (Default = All Off)
(2=Area "B")

1 = Arm Button Required Before Code to Set
2 = Stay Button Required Before Code to Set Stay Mode
3 = Code required to Set
4 = Code Required to Bypass Zones
5 = Spare
6 = Send Arm at the end of the Exit Delay
7 = Can Arm only if All Zones are Sealed (Ready)
8 = Can Arm Stay Mode only if All Zones are Sealed (Ready)

Area "A" & "B" Options B

P46E **1-2E** **Area A&B Options B** Page 51
(1=Area "A") (Default = All Off)
(2=Area "B")

1 = Near and Verified Alarm reporting for All zones in this Area (CID only)
2 = Area will arm at end of time-zone
3 = Area will disarm at beginning of time-zone
4 = Assign Chirps to Access tags
5 = Spare
6 = Spare
7 = Spare
8 = Spare

Area "A" & "B" Arm Indication to Output

P47E **1-2E** **Area A&B Arm Indication to Output** - Value 1-8 (for Outputs 1-8) Page 52
(1=Area "A") (Default = All Off)
(2=Area "B")

Area "A" & "B" Stay Arm Indication to Output

P48E **1-2E** **Area A&B Stay Arm Indication to Output** - Value 1-8 (for Outputs 1-8) Page 52
(1=Area "A") (Default = All Off)
(2=Area "B")

Area "A" & "B" Disarm Indication to Output

P49E **1-2E** **Area A&B Disarm Indication to Output** - Value 1-8 (for Outputs 1-8) Page 52
(1=Area "A") (Default = All Off)
(2=Area "B")

Area "A" & "B" Pendant (or Access Tag) Arm Chirp to Output

P50E **1-2E** **Area A&B Arm Chirp to Output** - Value 1-8 (for Outputs 1-8) Page 52
(1=Area "A") (Default = All Off) **(One chirp to the output for arm)**
(2=Area "B")

Area "A" & "B" Pendant (or Access Tag) Stay Arm Chirp to Output

P51E **1-2E** **Area A&B Stay Arm Chirp to Output** - Value 1-8 (for Outputs 1-8) Page 53
(1=Area "A") (Default = All Off) **(One chirp to the output for stay arm)**
(2=Area "B")

Area "A" & "B" Pendant (or Access Tag) Disarm Chirp to Output

P52E **1-2E** **Area A&B Disarm Chirp to Output** - Value 1-8 (for Outputs 1-8) Page 53
(1=Area "A") (Default = All Off) **(Two chirps to the output for disarm)**
(2=Area "B")

Area "A" & "B" Pendant Stay (or Access Tag) Disarm Chirp to Output

P53E **1-2E** **Area A&B Stay Disarm Chirp to Output** - Value 1-8 (for Outputs 1-8) Page 53
(1=Area "A") (Default = All Off) **(Two chirps to the output for disarm)**
(2=Area "B")

Area "A" & "B" Arm Pulse to Output

P54E **1-2E** **Area A&B Arm Pulse to Output** - Value 1-8 (for Outputs 1-8) Page 53
(1=Area "A") (Default = All Off)
(2=Area "B")

Area "A" & "B" Stay Arm Pulse to Output

P55E **1-2E** **Area A&B Stay Arm Pulse to Output** - Value 1-8 (for Outputs 1-8) Page 53
(1=Area "A") (Default = All Off)
(2=Area "B")

Area "A" & "B" Disarm Pulse to Output

P56E **1-2E** **Area A&B Disarm Pulse to Output** - Value 1-8 (for Outputs 1-8) Page 54
(1=Area "A") (Default = All Off)
(2=Area "B")

Area "A" & "B" Stay Disarm Pulse to Output

P57E **1-2E** **Area A&B Stay Disarm Pulse to Output** - Value 1-8 (for Outputs 1-8) Page 54
(1=Area "A") (Default = All Off)
(2=Area "B")

Area “A” & “B” Armed Mode Exit Delay Beeps to Keypad

P58E **1-2E** **Area A&B Armed Exit Delay Beeps to Keypad** - Value 1-8 (for Keypads 1-8) Page 54
(1=Area “A”) (Default, Area A = All On, Area B = All Off)
(2=Area “B”)

Area “A” & “B” Stay Mode Exit Delay Beeps to Keypad

P59E **1-2E** **Area A&B Stay Exit Delay Beeps to Keypad** - Value 1-8 (for Keypads 1-8) Page 54
(1=Area “A”) (Default Area A = All On, Area B = All Off)
(2=Area “B”)

Area “A” & “B” Armed Exit Delay Time

P60E **1-2E** **Area A&B Exit Delay Time** - Value 0-255 seconds Page 54
(1=Area “A”) (Default = 30 Seconds for Areas A&B)
(2=Area “B”)

Area “A” & “B” Stay Armed Exit Delay Time

P61E **1-2E** **Area A&B Stay Exit Delay Time** - Value 0-255 seconds Page 55
(1=Area “A”) (Default = 30 Seconds for Areas A&B)
(2=Area “B”)

Area “A” & “B” Monitoring Account Code Number

P62E **1-2E** **Area A&B Account Code** - Value 0000-FFFF Page 55
(1=Area “A”) (Default = 0000 for Areas A&B)
(2=Area “B”)

Area “A” & “B” Remote “Command Control” Code Number

P63E **1-2E** **Area A&B Command Control code** - Value 1-4 digit code (1-9999) Page 55
(1=Area “A”) (Default = 0 for Areas A&B)
(2=Area “B”)

Start Message Number for Areas “A” & “B” “Command Control”

P64E **1-2E** **Start Message for Areas A&B Command Control** - Value 0-99 Page 55
(1=Area “A”) (Default = 0 for Areas A&B)
(2=Area “B”)

Area “A” & “B” Armed Mode Exit Delay to Output

P65E **1-2E** **Area A&B Armed Exit Delay to Output** - Value 1-8 (for Outputs 1-8) Page 55
(1=Area “A”) (Default = All Off)
(2=Area “B”)

Area “A” & “B” Stay Mode Exit Delay to Output

P66E **1-2E** **Area A&B Stay Exit Delay to Output** - Value 1-8 (for Outputs 1-8) Page 56
(1=Area “A”) (Default = All Off)
(2=Area “B”)

Area “A” & “B” Delinquency Delay

P67E **1-2E** **Area A&B Delinquency Delay** - value 0-99 Days, (0 = Off) Page 56
(1=Area “A”) (Default = 0 for areas A&B)
(2=Area “B”)

Area “A” & “B” Auto Arm/Disarm Time-zones

P68E **1-2E** **Area A&B Auto Arm/Disarm Time-zones** - Value 1-8 (for Time-zones 1-8) Page 56
(1=Area “A”) (Default = All Off)
(2=Area “B”)

+++++Keypads+++++

Keypad Area Assignment

P71E **1-8E** **Keypads Assigned To Areas** Page 57
(Default = 1,2)
1 = Area “A”
2 = Area “B”

Keypad Button Options

P72E **1-8E** **Keypad Button Options** Page 57
(Default = All 1,2,3)
1 = <CHIME> or <CONTROL><PROGRAM> Button Enabled
2 = <BYPASS> Button Enabled
3 = <PANIC> Button Enabled
4 = Delayed panic on <PANIC> Button
5 = <1> + <3> or <CONTROL> + <CHIME> Panic Alarm Enabled
6 = <4> + <6> or <A> + <B> Fire Alarm Enabled
7 = <7> + <9> or <B> + <CHIME> Medical Alarm Enabled
8 = Spare

Alarm Beeps & LED Control to Keypad

P73E **1-8E** **Keypad Beep/LED Options** Page 58
(Default = 5)
1 = Mains Fail Beeps Keypad Buzzer
2 = Fuse Failure Beeps Keypad Buzzer
3 = Battery Low Beeps Keypad Buzzer
4 = Telephone Line Failure Beeps Keypad Buzzer
5 = System Tamper Alarm Beeps Keypad Buzzer

6 = Receiver Fail Beeps Keypad Buzzer
7 = Turn Off Keypad LED's when Armed
8 = Turn Off Keypad & Backlight LED's on Mains Failure

Keypad "ARM" Button Area Assignment

P74E **1-8E** **Keypad "ARM" Button Area** Page 58
(Default = 1)
1 = "ARM" Button assigned to Area "A"
2 = "ARM" Button assigned to Area "B"

Keypad "ARM" Button Area Options

P75E **1-8E** **Keypad "ARM" Button Opts.** Page 59
(Default = 1,7)
1 = "ARM" Button can Arm
2 = "ARM" Button can Stay Mode Arm
3 = "ARM" Button can Disarm at All Times
4 = "ARM" Button can Disarm Stay Mode at All Times
5 = "ARM" Button can Reset Alarms
6 = "ARM" Button can Arm Latchkey Mode
7 = "ARM" Button can Disarm During Exit Delay
8 = "ARM" Button can Disarm Stay Mode During Exit Delay

Keypad "STAY" Button Area Assignment

P76E **1-8E** **Keypad "STAY" Button Area** Page 59
(Default = 1)
1 = "STAY" Button assigned to Area "A"
2 = "STAY" Button assigned to Area "B"

Keypad "STAY" Button Area Options

P77E **1-8E** **Keypad "STAY" Button Opts.** Page 60
(Default K/P 1,2,3,4,6,7,8 = 2,8)
(Default K/P 5 = 2,4)
1 = "STAY" Button can Arm
2 = "STAY" Button can Stay Mode Arm
3 = "STAY" Button can Disarm at All Times
4 = "STAY" Button can Disarm Stay Mode at All Times
5 = "STAY" Button can Reset Alarms
6 = "STAY" Button can Arm Latchkey Mode
7 = "STAY" Button can Disarm During Exit Delay
8 = "STAY" Button can Disarm Stay Mode During Exit Delay

Keypad "A" Button (Large LCD KP only) Area Assignment

P78E **1-8E** **Keypad "A" Button Area** Page 60
(Default = 1)
1 = "A" Button assigned to Area "A"
2 = "A" Button assigned to Area "B"

Keypad "A" Button (Large LCD KP only) Area Options

P79E **1-8E** **Keypad "A" Button Opts.** Page 61
(Default = 1,7)
1 = "A" Button can Arm
2 = "A" Button can Stay Mode Arm
3 = "A" Button can Disarm at All Times
4 = "A" Button can Disarm Stay Mode at All Times
5 = "A" Button can Reset Alarms
6 = "A" Button can Arm Latchkey Mode
7 = "A" Button can Disarm During Exit Delay
8 = "A" Button can Disarm Stay Mode During Exit Delay

Keypad "B" Button (Large LCD KP only) Area Assignment

P80E **1-8E** **Keypad "B" Button Area** Page 61
(Default = 2)
1 = "B" Button assigned to Area "A"
2 = "B" Button assigned to Area "B"

Keypad "B" Button (Large LCD KP only) Area Options

P81E **1-8E** **Keypad "B" Button Opts.** Page 62
(Default = All Off)
1 = "B" Button can Arm
2 = "B" Button can Stay Mode Arm
3 = "B" Button can Disarm at All Times
4 = "B" Button can Disarm Stay Mode at All Times
5 = "B" Button can Reset Alarms
6 = "B" Button can Arm Latchkey Mode
7 = "B" Button can Disarm During Exit Delay
8 = "B" Button can Disarm Stay Mode During Exit Delay

Keypad to Output Mask (for Access Control)

P82E **1-8E** **Keypad to Output Mask** Page 62
(Default = All Off)
1 = The Keypad is linked to Output # 1
2 = The Keypad is linked to Output # 2
3 = The Keypad is linked to Output # 3
4 = The Keypad is linked to Output # 4
5 = The Keypad is linked to Output # 5
6 = The Keypad is linked to Output # 6
7 = The Keypad is linked to Output # 7
8 = The Keypad is linked to Output # 8

"Control" Button to Output Mask (for Access Control)

P83E **1-8E** **Keypad "Control" Button to Output Mask** Page 63
(Default = All Off)
1 = The Keypad "Control" Button is linked to Output # 1
2 = The Keypad "Control" Button is linked to Output # 2
3 = The Keypad "Control" Button is linked to Output # 3
4 = The Keypad "Control" Button is linked to Output # 4
5 = The Keypad "Control" Button is linked to Output # 5
6 = The Keypad "Control" Button is linked to Output # 6
7 = The Keypad "Control" Button is linked to Output # 7
8 = The Keypad "Control" Button is linked to Output # 8

“Panic” Button or “1&3” Alarm to Outputs

P84E 1-8E Keypad “Panic” Button or “1&3” Alarm to Outputs Page 63

(Default = 1,2)

1 = The Keypad “Panic” Button or “1&3” will turn on Output # 1
2 = The Keypad “Panic” Button or “1&3” will turn on Output # 2
3 = The Keypad “Panic” Button or “1&3” will turn on Output # 3
4 = The Keypad “Panic” Button or “1&3” will turn on Output # 4
5 = The Keypad “Panic” Button or “1&3” will turn on Output # 5
6 = The Keypad “Panic” Button or “1&3” will turn on Output # 6
7 = The Keypad “Panic” Button or “1&3” will turn on Output # 7
8 = The Keypad “Panic” Button or “1&3” will turn on Output # 8

“Fire (4&6)” Alarm to Outputs

P85E 1-8E Keypad “Fire (4&6)” Alarm to Outputs Page 63

(Default = 1,2)

1 = The Keypad “Fire (4&6)” Alarm will turn on Output # 1
2 = The Keypad “Fire (4&6)” Alarm will turn on Output # 2
3 = The Keypad “Fire (4&6)” Alarm will turn on Output # 3
4 = The Keypad “Fire (4&6)” Alarm will turn on Output # 4
5 = The Keypad “Fire (4&6)” Alarm will turn on Output # 5
6 = The Keypad “Fire (4&6)” Alarm will turn on Output # 6
7 = The Keypad “Fire (4&6) Alarm “will turn on Output # 7
8 = The Keypad “Fire (4&6) Alarm “will turn on Output # 8

“Medical (7&9)” Alarm to Outputs

P86E 1-8E Keypad “Medical (7&9)” Alarm to Outputs Page 63

(Default = 1,2)

1 = The Keypad “Medical (7&9)” Alarm will turn on Output # 1
2 = The Keypad “Medical (7&9)” Alarm will turn on Output # 2
3 = The Keypad “Medical (7&9)” Alarm will turn on Output # 3
4 = The Keypad “Medical (7&9)” Alarm will turn on Output # 4
5 = The Keypad “Medical (7&9)” Alarm will turn on Output # 5
6 = The Keypad “Medical (7&9)” Alarm will turn on Output # 6
7 = The Keypad “Medical (7&9)” Alarm will turn on Output # 7
8 = The Keypad “Medical (7&9)” Alarm will turn on Output # 8

“Duress” Alarm to Outputs

P87E 1-8E Keypad “Duress” Alarm to Outputs Page 63

(Default = All Off)

1 = The Keypad “Duress” Alarm will turn on Output # 1
2 = The Keypad “Duress” Alarm will turn on Output # 2
3 = The Keypad “Duress” Alarm will turn on Output # 3
4 = The Keypad “Duress” Alarm will turn on Output # 4
5 = The Keypad “Duress” Alarm will turn on Output # 5
6 = The Keypad “Duress” Alarm will turn on Output # 6
7 = The Keypad “Duress” Alarm will turn on Output # 7
8 = The Keypad “Duress” Alarm will turn on Output # 8

Keypad “Tamper Switch” Alarm to Outputs

P88E 1-8E Keypad “Tamper Switch” Alarm to Outputs Page 64

(Default = All Off)

1 = The Keypad “Tamper Switch” Alarm will turn on Output # 1
2 = The Keypad “Tamper Switch” Alarm will turn on Output # 2
3 = The Keypad “Tamper Switch” Alarm will turn on Output # 3
4 = The Keypad “Tamper Switch” Alarm will turn on Output # 4
5 = The Keypad “Tamper Switch” Alarm will turn on Output # 5
6 = The Keypad “Tamper Switch” Alarm will turn on Output # 6
7 = The Keypad “Tamper Switch” Alarm will turn on Output # 7
8 = The Keypad “Tamper Switch” Alarm will turn on Output # 8

Keypad “Wrong Code” Alarm to Outputs

P89E 1-8E Keypad “Wrong Code” Alarm to Outputs Page 64

(Default = All Off)

1 = The Keypad “Wrong Code” Alarm will turn on Output # 1
2 = The Keypad “Wrong Code” Alarm will turn on Output # 2
3 = The Keypad “Wrong Code” Alarm will turn on Output # 3
4 = The Keypad “Wrong Code” Alarm will turn on Output # 4
5 = The Keypad “Wrong Code” Alarm will turn on Output # 5
6 = The Keypad “Wrong Code” Alarm will turn on Output # 6
7 = The Keypad “Wrong Code” Alarm will turn on Output # 7
8 = The Keypad “Wrong Code” Alarm will turn on Output # 8

Manually Operated Panic Alarm Beeps to Keypads

P90E 1-8E Panic Alarm Beeps to Keypads Page 64

(Default = All On)

1 = A Panic Alarm at the selected keypad will Beep KP # 1
2 = A Panic Alarm at the selected keypad will Beep KP # 2
3 = A Panic Alarm at the selected keypad will Beep KP # 3
4 = A Panic Alarm at the selected keypad will Beep KP # 4
5 = A Panic Alarm at the selected keypad will Beep KP # 5
6 = A Panic Alarm at the selected keypad will Beep KP # 6
7 = A Panic Alarm at the selected keypad will Beep KP # 7
8 = A Panic Alarm at the selected keypad will Beep KP # 8

Manually Operated Fire Alarm Beeps to Keypads

P91E 1-8E Fire Alarm Beeps to Keypads Page 64

(Default = All On)

1 = A Fire Alarm at the selected keypad will Beep KP # 1
2 = A Fire Alarm at the selected keypad will Beep KP # 2
3 = A Fire Alarm at the selected keypad will Beep KP # 3
4 = A Fire Alarm at the selected keypad will Beep KP # 4
5 = A Fire Alarm at the selected keypad will Beep KP # 5
6 = A Fire Alarm at the selected keypad will Beep KP # 6
7 = A Fire Alarm at the selected keypad will Beep KP # 7
8 = A Fire Alarm at the selected keypad will Beep KP # 8

Manually Operated Medical Alarm Beeps to Keypads

P92E 1-8E Medical Alarm Beeps to Keypads Page 64

(Default = All On)

1 = A Medical Alarm at the selected keypad will Beep KP # 1
2 = A Medical Alarm at the selected keypad will Beep KP # 2
3 = A Medical Alarm at the selected keypad will Beep KP # 3
4 = A Medical Alarm at the selected keypad will Beep KP # 4
5 = A Medical Alarm at the selected keypad will Beep KP # 5
6 = A Medical Alarm at the selected keypad will Beep KP # 6
7 = A Medical Alarm at the selected keypad will Beep KP # 7
8 = A Medical Alarm at the selected keypad will Beep KP # 8

Wrong Code or Keypad Tamper Switch Alarm Beeps to Keypads

P93E 1-8E Wrong Code or Keypad Tamper Switch Alarm Beeps to Keypads Page 64

(Default = All On)

1 = A Wrong Code or KP Tamper Alarm at Keypad 1-8 will Beep KP # 1
2 = A Wrong Code or KP Tamper Alarm at Keypad 1-8 will Beep KP # 2
3 = A Wrong Code or KP Tamper Alarm at Keypad 1-8 will Beep KP # 3
4 = A Wrong Code or KP Tamper Alarm at Keypad 1-8 will Beep KP # 4
5 = A Wrong Code or KP Tamper Alarm at Keypad 1-8 will Beep KP # 5
6 = A Wrong Code or KP Tamper Alarm at Keypad 1-8 will Beep KP # 6
7 = A Wrong Code or KP Tamper Alarm at Keypad 1-8 will Beep KP # 7
8 = A Wrong Code or KP Tamper Alarm at Keypad 1-8 will Beep KP # 8

Chime Alarm Beep Time at a Keypad

P94E 1-8E The Time the Chime Alarm will sound at Each Keypad - Value =0-255 1/10th sec Page 65

(Default = 20 which is 2 Seconds)

Proximity Reader LED to Output Mapping

P98E 1-8E Proximity Reader LED to Output Mapping Page 65

(Default = None)

1 = Proximity Reader 1-8 LED will follow the state of Output # 1
2 = Proximity Reader 1-8 LED will follow the state of Output # 2
3 = Proximity Reader 1-8 LED will follow the state of Output # 3
4 = Proximity Reader 1-8 LED will follow the state of Output # 4
5 = Proximity Reader 1-8 LED will follow the state of Output # 5
6 = Proximity Reader 1-8 LED will follow the state of Output # 6
7 = Proximity Reader 1-8 LED will follow the state of Output # 7
8 = Proximity Reader 1-8 LED will follow the state of Output # 8

Learn Proximity Reader Keypad Address Number

P99E 1-8E Learn Proximity Reader Keypad Address Number - Value = Keypad Address 1-8 Page 65

+++++Key-switches+++++

Key-switch Area Assignment

P111E 1-2E K/S 1 & 2 assigned to Areas A or B - Page 66

(1 = K/S # 1) (Default K/S # 1 = 1)
(2 = K/S # 2) (Default K/S # 2 = 2)

1 = Assigned to Area "A"
2 = Assigned to Area "B"

Key-switch Access & Operational Options

P112E 1-2E K/S 1 & 2 Access & Operational Options Page 66

(1 = K/S # 1) (Default = All Off)
(2 = K/S # 2)

1 = K/S can Arm Area
2 = K/S can arm Stay Mode
3 = K/S can Disarm Area
4 = K/S can disarm Stay Mode
5 = K/S has Security Guard Options
6 = K/S will Arm Latchkey Mode
7 = Key-switch is N/O (If turned off the K/S is N/C)
8 = Key-switch is Momentary (If turned off the K/S is Latching)

+++++Zones+++++

Programming Zones to Areas

P121E 1-16E **Assigning Zones to Areas A or B** Page 67
(Default = 1)

1 = Assigned to Area "A"
2 = Assigned to Area "B"

Programming Zone Options A

P122E 1-16E **Programming Zone Options A** Page 67
(Default Zone 1-4 = 1,6,7,8)
(Default Zone 5-8 = 1,7,8)
(Default Zone 9-16 = 7,8)

1 = Zone is Active
2 = Zone is N/O (Off = N/C)
3 = Spare
4 = Keypad Zone
5 = Zone is a Radio Zone
6 = Zone is a Stay Mode Zone
7 = Zone can be Manually Bypassed
8 = Zone can be Auto-Bypassed

Programming Zone Options B

P123E 1-16E **Programming Zone Options B** Page 68
(Default = All Off)

1 = Zone is a Handover Zone
2 = Zone is a Two Trigger Zone
3 = Zone is a 24 Hour Zone
4 = Zone is a 24 Hour Auto-reset Zone
5 = Zone is a 24 Hour Fire Zone
6 = Zone is a One-Shot Zone
7 = Zone is a Chime Zone
8 = Zone is a Permanent Chime Zone

Programming Zone Options C

P124E 1-16E **Programming Zone Options C** Page 69
(Default = 2)

1 = Can Arm if Zone is not Ready
2 = Will Send Multiple Reports via Dialler
3 = Sensor-Watch Zone
4 = Zone is on Soak Test
5 = Zone will report to Area B Account Number
6 = Zone will Not Report 24 hour Alarms via Dialler
7 = Spare
8 = Spare

Programming Zone EOL (End-of-line) Options

P125E 1-8E **Programming Zone EOL Options** Page 69
(Default = 3)

0 = Short Circuit
1 = 1k
2 = 1k5
3 = 2k2
4 = 3k3
5 = 3k9
6 = 4k7
7 = 5k6
8 = 6k8
9 = 10k
10 = 12k
11 = 22k
12 = 2k2 / 4k7
13 = 3k3 / 6k8
14 = 2k2 / 4k7 / 8k2
15 = 4k7 / 8k2

Programming Zone Response

P126E 1-8E **Programming Zone Response** Page 70
(Default = 9)

1 to 8 Vibration mode
(Zone EOL-P125E, for Vibration Mode MUST be type 3 only)
1 = highest and 8 is lowest sensitivity level.

9 to 26 Normal zone mode
Response time = approx 200ms –1sec

Programming the Radio Zone Detector Type

P127E 1-16E **Programming the Radio Zone Type from the List** - Value = 1-35 Page 70
(Default = 4)

0 = Generic
1 = Crow Merlin PIR (supervised signal ignored)
2 = Crow Merlin PIR (supervised signal active)
3 = Freelink with checksum (supervised signal active)
4 = Freelink with checksum (non-supervised)
5 = Crow AE Series Battery low
6 = Crow AE Radio Reed Switch
11 = Ness Devices battery Low
12 = Ness Radio Reed Switch
31 = Visonic K900 Radio PIR
32 = Visonic Powercode (supervised signal ignored)
33 = Visonic Powercode (supervised signal active)
34 = Siemens (supervised signal ignored)
35 = Siemens (supervised signal active)

Armed Zone Alarms to Outputs

P128E 1-16E **Armed Zone Alarms to Output** Page 71

(Default = 1,2)

1 = A Zone Alarm will Turn On Output # 1
2 = A Zone Alarm will Turn On Output # 2
3 = A Zone Alarm will Turn On Output # 3
4 = A Zone Alarm will Turn On Output # 4
5 = A Zone Alarm will Turn On Output # 5
6 = A Zone Alarm will Turn On Output # 6
7 = A Zone Alarm will Turn On Output # 7
8 = A Zone Alarm will Turn On Output # 8

Armed Stay Mode Zone Alarms to Outputs

P129E 1-16E **Armed Stay Mode Zone Alarms to Output** Page 71

(Default = 2)

1 = A Stay Mode Zone Alarm will Turn On Output # 1
2 = A Stay Mode Zone Alarm will Turn On Output # 2
3 = A Stay Mode Zone Alarm will Turn On Output # 3
4 = A Stay Mode Zone Alarm will Turn On Output # 4
5 = A Stay Mode Zone Alarm will Turn On Output # 5
6 = A Stay Mode Zone Alarm will Turn On Output # 6
7 = A Stay Mode Zone Alarm will Turn On Output # 7
8 = A Stay Mode Zone Alarm will Turn On Output # 8

24 Hour Zone Alarms to Outputs

P130E 1-16E **24 Hour Zone Alarms to Output** Page 72

(Default = All Off)

1 = A 24 Hour Zone Alarm will Turn On Output # 1
2 = A 24 Hour Zone Alarm will Turn On Output # 2
3 = A 24 Hour Zone Alarm will Turn On Output # 3
4 = A 24 Hour Zone Alarm will Turn On Output # 4
5 = A 24 Hour Zone Alarm will Turn On Output # 5
6 = A 24 Hour Zone Alarm will Turn On Output # 6
7 = A 24 Hour Zone Alarm will Turn On Output # 7
8 = A 24 Hour Zone Alarm will Turn On Output # 8

Chime Zone Alarms to Outputs

P131E 1-16E **Chime Zone Alarms to Output** Page 72

(Default = All Off)

1 = A Chime Zone Alarm will Turn On Output # 1
2 = A Chime Zone Alarm will Turn On Output # 2
3 = A Chime Zone Alarm will Turn On Output # 3
4 = A Chime Zone Alarm will Turn On Output # 4
5 = A Chime Zone Alarm will Turn On Output # 5
6 = A Chime Zone Alarm will Turn On Output # 6
7 = A Chime Zone Alarm will Turn On Output # 7
8 = A Chime Zone Alarm will Turn On Output # 8

Zone Tamper Alarms to Outputs

P132E 1-16E **Zone Tamper Alarms to Output** Page 72

(Default = 1,2)

1 = A Zone Tamper Alarm will Turn On Output # 1
2 = A Zone Tamper Alarm will Turn On Output # 2
3 = A Zone Tamper Alarm will Turn On Output # 3
4 = A Zone Tamper Alarm will Turn On Output # 4
5 = A Zone Tamper Alarm will Turn On Output # 5
6 = A Zone Tamper Alarm will Turn On Output # 6
7 = A Zone Tamper Alarm will Turn On Output # 7
8 = A Zone Tamper Alarm will Turn On Output # 8

Armed Zone Alarm Beeps to Keypads

P134E 1-16E **Armed Zone Alarm Beeps to Keypads** Page 72

(Default = All On)

1 = An Armed Zone Alarm will Beep Keypad #1
2 = An Armed Zone Alarm will Beep Keypad #2
3 = An Armed Zone Alarm will Beep Keypad #3
4 = An Armed Zone Alarm will Beep Keypad #4
5 = An Armed Zone Alarm will Beep Keypad #5
6 = An Armed Zone Alarm will Beep Keypad #6
7 = An Armed Zone Alarm will Beep Keypad #7
8 = An Armed Zone Alarm will Beep Keypad #8

Stay Mode Zone Alarm Beeps to Keypads

P135E 1-16E **Stay Mode Zone Alarm Beeps to Keypads** Page 73

(Default = All On)

1 = A Stay Mode Zone Alarm will Beep Keypad #1
2 = A Stay Mode Zone Alarm will Beep Keypad #2
3 = A Stay Mode Zone Alarm will Beep Keypad #3
4 = A Stay Mode Zone Alarm will Beep Keypad #4
5 = A Stay Mode Zone Alarm will Beep Keypad #5
6 = A Stay Mode Zone Alarm will Beep Keypad #6
7 = A Stay Mode Zone Alarm will Beep Keypad #7
8 = A Stay Mode Zone Alarm will Beep Keypad #8

24 Hour Zone Alarm Beeps to Keypads

P136E 1-16E 24 Hour Zone Alarm Beeps to Keypads Page 73

(Default = All On)

1 = A 24 Hour Zone Alarm will Beep Keypad #1
2 = A 24 Hour Zone Alarm will Beep Keypad #2
3 = A 24 Hour Zone Alarm will Beep Keypad #3
4 = A 24 Hour Zone Alarm will Beep Keypad #4
5 = A 24 Hour Zone Alarm will Beep Keypad #5
6 = A 24 Hour Zone Alarm will Beep Keypad #6
7 = A 24 Hour Zone Alarm will Beep Keypad #7
8 = A 24 Hour Zone Alarm will Beep Keypad #8

Chime Zone Alarm Beeps to Keypads

P137E 1-16E Chime Zone Alarm Beeps to Keypads Page 73

(Default = All Off)

1 = A Chime Zone Alarm will Beep Keypad #1
2 = A Chime Zone Alarm will Beep Keypad #2
3 = A Chime Zone Alarm will Beep Keypad #3
4 = A Chime Zone Alarm will Beep Keypad #4
5 = A Chime Zone Alarm will Beep Keypad #5
6 = A Chime Zone Alarm will Beep Keypad #6
7 = A Chime Zone Alarm will Beep Keypad #7
8 = A Chime Zone Alarm will Beep Keypad #8

Zone Tamper Alarm Beeps to Keypads

P139E 1-16E Zone Tamper Alarm Beeps to Keypads Page 73

(Default = All On)

1 = A Zone Tamper Alarm will Beep Keypad #1
2 = A Zone Tamper Alarm will Beep Keypad #2
3 = A Zone Tamper Alarm will Beep Keypad #3
4 = A Zone Tamper Alarm will Beep Keypad #4
5 = A Zone Tamper Alarm will Beep Keypad #5
6 = A Zone Tamper Alarm will Beep Keypad #6
7 = A Zone Tamper Alarm will Beep Keypad #7
8 = A Zone Tamper Alarm will Beep Keypad #8

Radio Supervise Alarm Beeps to Keypads

P140E 1-16E Radio Supervise Alarm Beeps to Keypads Page 74

(Default = All Off)

1 = A Radio Supervise Alarm will Beep Keypad #1
2 = A Radio Supervise Alarm will Beep Keypad #2
3 = A Radio Supervise Alarm will Beep Keypad #3
4 = A Radio Supervise Alarm will Beep Keypad #4
5 = A Radio Supervise Alarm will Beep Keypad #5
6 = A Radio Supervise Alarm will Beep Keypad #6
7 = A Radio Supervise Alarm will Beep Keypad #7
8 = A Radio Supervise Alarm will Beep Keypad #8

Zone Sensor-watch Alarm Beeps to Keypads

P141E 1-16E Zone Sensor-watch Alarm Beeps to Keypads Page 74

(Default = All Off)

1 = A Zone Sensor-watch Alarm will Beep Keypad #1
2 = A Zone Sensor-watch Alarm will Beep Keypad #2
3 = A Zone Sensor-watch Alarm will Beep Keypad #3
4 = A Zone Sensor-watch Alarm will Beep Keypad #4
5 = A Zone Sensor-watch Alarm will Beep Keypad #5
6 = A Zone Sensor-watch Alarm will Beep Keypad #6
7 = A Zone Sensor-watch Alarm will Beep Keypad #7
8 = A Zone Sensor-watch Alarm will Beep Keypad #8

Armed Zone Entry Delay Beeps to Keypads

P142E 1-16E Armed Zone Entry Delay Beeps to Keypads Page 74

(Default = 1)

1 = Armed Zone Entry Delay will Beep Keypad #1
2 = Armed Zone Entry Delay will Beep Keypad #2
3 = Armed Zone Entry Delay will Beep Keypad #3
4 = Armed Zone Entry Delay will Beep Keypad #4
5 = Armed Zone Entry Delay will Beep Keypad #5
6 = Armed Zone Entry Delay will Beep Keypad #6
7 = Armed Zone Entry Delay will Beep Keypad #7
8 = Armed Zone Entry Delay will Beep Keypad #8

Stay Mode Entry Delay Beeps to Keypads

P143E 1-16E Stay Mode Entry Delay Beeps to Keypads Page 74

(Default = 1)

1 = Stay Mode Entry Delay will Beep Keypad #1
2 = Stay Mode Entry Delay will Beep Keypad #2
3 = Stay Mode Entry Delay will Beep Keypad #3
4 = Stay Mode Entry Delay will Beep Keypad #4
5 = Stay Mode Entry Delay will Beep Keypad #5
6 = Stay Mode Entry Delay will Beep Keypad #6
7 = Stay Mode Entry Delay will Beep Keypad #7
8 = Stay Mode Entry Delay will Beep Keypad #8

Armed Zone Entry Delay Times

P144E 1-16E **Armed Zone Entry Delay Times** - Value 0-9999 seconds Page 74
(Default Zone # 1 = 20 Seconds, Zones # 2-16 = 0)

Stay Mode Entry Delay Times

P145E 1-16E **Stay Mode Entry Delay Times** - Value 0-9999 seconds Page 74
(Default Zones # 1-4 = 20 Seconds, Zones # 5-16 = 0)

Zone Lockout (re-trigger) Times

P146E 1-16E **Zone Re-Trigger Times** - Value 0-255 minutes Page 75
(Default = 0 Minutes)

Zone Alarm 4+2 Reporting Codes

P147E 1-16E **Zone Alarm 4+2 Reporting Code -** Two digit value from 00-FF Page 88

Zone Alarm 4+2 Restore Reporting Codes

P148E 1-16E **Zone Alarm Restore 4+2 Code -** Two digit value from 00-FF Page 88

Zone Near Alarm 4+2 Reporting Codes

P149E 1-16E **Zone Near Alarm 4+2 Reporting Code -** Two digit value from 00-FF Page 88

Zone Near Alarm 4+2 Restore Reporting Codes

P150E 1-16E **Zone Near Alarm Restore 4+2 Code -** Two digit value from 00-FF Page 88

Zone Intrusion Verified Alarm 4+2 Reporting Codes

P151E 1-16E **Zone Intrusion Verified Alarm 4+2 Reporting Code -** Two digit value from 00-FF Page 88

Zone Intrusion Verified Alarm 4+2 Restore Reporting Codes

P152E 1-16E **Zone Intrusion Verified Alarm Restore 4+2 Code -** Two digit value from 00-FF Page 88

Zone Bypass Alarm 4+2 Reporting Codes

P155E 1-16E **Zone Bypass Alarm 4+2 Reporting Code -** Two digit value from 00-FF Page 88

Zone Bypass 4+2 Restore Reporting Codes

P156E 1-16E **Zone Bypass Restore 4+2 Code -** Two digit value from 00-FF Page 88

Zone Alarm Contact ID Reporting Codes

P157E 1-16E **Zone Alarm Contact ID Reporting Code -** (Default = 130) Page 75

Zone Near Alarm Contact ID Reporting Codes

P158E 1-16E **Zone Near Alarm Contact ID Reporting Code -** (Default = 138) Page 75

Zone Intrusion Verified Alarm Contact ID Reporting Codes

P159E 1-16E **Zone Intrusion Verified Alarm Contact ID Reporting Code -** (Default = 139) Page 75

Zone Alarm Voice Message Number

P160E 1-16E **Zone Alarm Voice Message Number -** Value-0-99 (Default = 1) Page 75

Away Zone Entry Delay to Outputs

P161E 1-16E **Away Zone Entry Delay to Outputs** Page 75
(Default = All Off)

1 = Armed Zone Entry Delay to output #1
2 = Armed Zone Entry Delay to output #2
3 = Armed Zone Entry Delay to output #3
4 = Armed Zone Entry Delay to output #4
5 = Armed Zone Entry Delay to output #5
6 = Armed Zone Entry Delay to output #6
7 = Armed Zone Entry Delay to output #7
8 = Armed Zone Entry Delay to output #8

Stay Mode Entry Delay to Outputs

P162E 1-16E **Stay Mode Entry Delay Beeps to Outputs** Page 75
(Default = All Off)

1 = Stay Mode Entry Delay to output #1
2 = Stay Mode Entry Delay to output #2
3 = Stay Mode Entry Delay to output #3
4 = Stay Mode Entry Delay to output #4
5 = Stay Mode Entry Delay to output #5
6 = Stay Mode Entry Delay to output #6
7 = Stay Mode Entry Delay to output #7
8 = Stay Mode Entry Delay to output #8

Sensor-Watch Timer

P163E 1-16E **Sensor-Watch Timer -** 0-9999 Minutes (Default = 7200 minutes [120 Hours]) Page 76

Enrolling Radio Zone Codes

P164E 1-16E **Learn Radio Zone Codes** Page 76

Delete a Specific Radio Zone Code

P165E 1-16E **Delete a Specific Radio Zone Code** Page 76

Find Radio Zone memory Location

P166E 0E **This will find the zone # of any Radio Zone code stored in the panel** Page 76
Only press 0E when using LED Keypad.

+++++Time Zones+++++

Programming Holidays

P170E 1-8E **Holidays 1-8 Days -** Value = DDMMYY Page 77

Programming Time Zone Days

P171E 1-8E **Time Zones 1-8 Days** Page 77
(Default = All Off)
1 = Sunday
2 = Monday
3 = Tuesday
4 = Wednesday
5 = Thursday
6 = Friday
7 = Saturday
8 = Invert

Programming Time Zone Start & End Times

P172E 1-8E **Time Zones 1-8 Start Time -** Value 0000-2359 (Default = 0000) Page 77
P173E 1-8E **Time Zones 1-8 End Time -** Value 0000-2359 (Default = 0000) Page 77

Time Zone Options

P174E 1-8E **Time Zone 1-8 Options** Page 77
(Default = All Off)
1 = Ignore Holidays
2-8 = Spare

+++++Dialler+++++

Dialler Programming Options

P175E 1E **Dialler options** Page 78
(Default = 7)
1 = Dialler is Enabled
2 = Fax Defeat
3 = Disable Telephone Line Monitoring
4 = DTMF or Pulse Dial **(For DTMF, 4&5 must both be OFF)**
5 = DTMF or Reverse Pulse Dial **(For DTMF, 4&5 must both be OFF)**
6 = Send long DTMF tones during dialing
7 = Auto Detect Modem Mode
8 = Bell 103 or V21

Dialler Programming Options 2

P175E 2E **Dialler options 2** Page 78
(Default = 1)
1 = Step number on each call
2 = Upload/Download use callback
3 = Upload/Download only if disarmed
4 = Test calls only if armed
5 = Spare
6 = Hold line open following Domestic/Voice report for DTMF control
7 = First to Open Last to Close Reporting
8 = Spare

Auto-Answer Ring Count

P175E 3E **Auto-Answer Ring Count -** Value 0-99 (Default = 25) Page 79

Time to the First Dialler Test Call

P175E 4E **Time of the First Dialler Test Call -** Value 0000-2359 (Default = 2300) Page 79

Test Call Time Period

P175E 5E **Test Time Call Period -** Value 0-255 Hours: 0 = No Test (Default = 24) Page 79

Keypad Listen-in Options

P175E 6E **Keypad Listen-in Options** Page 79

(Default = 1,2,3,4,5,6,7)
1 = Enabled During Dialling in Disarm State only
2 = Enabled During Dialling in Armed State only
3 = Enabled During Dialling in Stay Mode State only
4 = Enabled Throughout the call in Disarm State only
5 = Enabled Throughout the call in Armed State only
6 = Enabled Throughout the call in Stay Mode State only
7 = Listen-in Enabled when the panel answers a call
8 = Enabled at All Times

Output # 1 Listen-in Options

P175E 7E **Output # 1 Listen-in Options** Page 80

(Default = All Off)
1 = Enabled During Dialling in Disarm State only
2 = Enabled During Dialling in Armed State only
3 = Enabled During Dialling in Stay Mode State only
4 = Enabled Throughout the call in Disarm State only
5 = Enabled Throughout the call in Armed State only
6 = Enabled Throughout the call in Stay Mode State only
7 = Listen-in Enabled when the panel answers a call
8 = Enabled at All Times

Dialling Pre-fix Number

P175E 8E **Dialling Pre-fix Number -** Value 1-16 Digits (Default = 0) Page 80

"Panic" Alarm Contact ID Reporting Code

P175E 9E **"Panic" Alarm CID Reporting Code** - (Default=120) Page 80

"Fire" Alarm Contact ID Reporting Code

P175E 10E **"Fire" Alarm CID Reporting Code** - (Default=110) Page 80

"Medical" Alarm Contact ID Reporting Code

P175E 11E **"Medical" Alarm CID Reporting Code** - (Default=100) Page 80

Output "Command Control" Code Number

P175E 12E **Output Command Control code** - Value 1-4 digit code (1-9999) (Default = 0) Page 80

Microphone On/Off "Command Control" Code Number

P175E 13E **Microphone Command Control code** - Value 1-4 digit code (1-9999) (Default = 0) Page 81

Dialler Acknowledge Code

P175E 14E **Voice/Domestic Acknowledge Code** - Value 1-4 digit code (1-9999) (Default = 0) Page 81

Force Test Call Code

P175E 15E **Force Test Call Code** - Value 1-4 digit code (1-9999) (Default = 0, Feature disabled) Page 81

Programming Voice Board Messages

P176E 1E **Keypad or Radio "Panic" Alarm Voice Message Number -** Value 0-99 (Default = 1) Page 81
P176E 2E **"Fire" Alarm Voice Message Number -** Value 0-99 (Default = 1) Page 81
P176E 3E **"Medical" Alarm Voice Message Number -** Value 0-99 (Default = 1) Page 81
P176E 4E **"Mains Failure" Voice Message Number -** Value 0-99 (Default = 1) Page 81
P176E 5E **"Mains Restore" Voice Message Number -** Value 0-99 (Default = 1) Page 81
P176E 6E **"Battery Low" Voice Message Number -** Value 0-99 (Default = 1) Page 81
P176E 7E **"Battery Restored" Voice Message Number -** Value 0-99 (Default = 1) Page 81
P176E 8E **"Tamper" (Zone/Radio/System) Voice Message Number -** Value 0-99 (Default = 1) Page 81
P176E 9E **"Duress Alarm" Voice Message Number -** Value 0-99 (Default = 1) Page 81
P176E 10E **"Latchkey Disarm" Voice Message Number -** Value 0-99 (Default = 1) Page 81
P176E 11E **"Manual Test Initiated" Voice Message Number -** Value 0-99 (Default = 1) Page 81

+++++Telephone Numbers+++++

Programming Telephone Numbers

P181E 1-8E **Programming Telephone Numbers -** Value 1-16 Digits (Default = 0) Page 82

Telephone Number Reporting Formats

P182E 1-8E **Telephone Number Reporting Formats** Page 82

(Default = 1)

1 = Contact ID
2 = Domestic Dial
3 = Pager
4 = Speech Dialler
5 = 4+2 10pps (Handshake 1400/ Tone 1900)
6 = 4+2 10pps (Handshake 2300/ Tone 1800)
7= 4+2 20pps (Handshake 1400/ Tone 1900)
8= 4+2 20pps (Handshake 2300/ Tone 1800)
9= 4+2 DTMF (with Checksum)

Telephone Number Reporting Options

P183E 1-8E **Telephone Number Reporting Options** Page 83

(Default = 1,2)

1 = Stop Dialling if Kissed off
2 = Monitor Call Progress
3 = Blind Dial
4 = Use Group Numbers for Contact ID Reporting
5 = Spare
6 = Auto Kiss-off for Voice/Domestic Reporting
7 = Use the Dialling Pre-fix
8 = Is to be used as the “Call-back” Number

Maximum Dial Attempts per Telephone Number

P184E 1-8E **Maximum Dial Attempts per Telephone Number -** Value 0-99 (Default = 20) Page 84

Dialler Reporting Options A

P186E 1-8E **Dialler Options A** Page 84

(Default = All On)

1 = Report Mains Failure
2 = Report Battery low
3 = Report Radio Battery Low
4 = Report Line Fail
5 = Report System Tamper
6 = Report Keypad Tamper
7 = Report Zone Tamper
8 = Report Radio Zone Tamper

Dialler Reporting Options B

P187E 1-8E **Dialler Options B** Page 84

(Default = All On)

1 = Report Duress Alarm
2 = Report Supervised Radio Alarm
3 = Report Zone Sensor-watch Alarm
4 = Report Manual Panic Alarm
5 = Report Manual Fire Alarm
6 = Report Manual Medical Alarm
7 = Report Radio Pendant Panic Alarm
8 = Report Zone Bypasses

Dialler Reporting Options C

P188E 1-8E **Dialler Options C** Page 85

(Default = 1,6,8)

1 = Report Arm/Disarm
2 = Report Stay Mode Arm/Disarm
3 = Report Disarm only after an Activation
4 = Report Stay Mode Disarm only after an Activation
5 = Report Stay Mode Zone Alarms
6 = Report Access to Program Mode
7 = Report 24 Hour Alarms when set to Domestic/Voice mode
8 = Report Zone Restores

Dialler Reporting Options D

P189E 1-8E **Dialler Options D** Page 86

(Default = 3,4,5

1 = Report Latchkey Disarm
2 = Report Delinquent
3 = Report Tests
4 = Report Fuse Failure
5 = Report Output 1 or 2 Fail
6 = Spare
7 = Spare
8 = Spare

Divert Area Events

P192E 1-2E Divert Area Events Page 86

(1=Area A) (Default = All Off)
(2=Area B)

1 = Dial on away arm
2 = Dial on away disarm
3 = Dial on stay arm
4 = Dial on stay disarm
5 = Dial if Key-switch activation
6 = Dial if Time zone activation
7 = Dial if DTMF or PC activation
8 = Dial if keypad “ARM” or “STAY” single button activation

Divert Number Options

P193E 1-2E Divert Numbers Options Page 87

(1=Divert on) (Default = All Off)
(2=Divert off)

1 = Spare
2 = Spare
3 = Blind Dial
4 = Spare
5 = Spare
6 = Spare
7 = Use the Dialling Pre-fix
8 = Spare

Divert Numbers

P194E 1-2E Divert Numbers - Value 1-16 Digits (Default = 0) Page 87

(1=Divert on)
(2=Divert off)

+++++Miscellaneous 4+2 Program Options+++++

Mains & Battery 4+2 Reporting Codes

P195E 1E Mains Failure 4+2 Code - Two digit value from 00-FF Page 89
P195E 2E Mains Failure restore 4+2 Code - Two digit value from 00-FF Page 89
P195E 3E Low Battery 4+2 Code - Two digit value from 00-FF Page 89
P195E 4E Low Battery Restore 4+2 Code - Two digit value from 00-FF Page 89

System Tamper 4+2 Reporting Codes

P195E 5E 4+2 Alarm Code for System Tamper - Two digit value from 00-FF Page 89
P195E 6E 4+2 Alarm Code for System Tamper Restore - Two digit value from 00-FF Page 89

Remote Arm/Disarm 4+2 Reporting Codes

P195E 7E 4+2 Code for Remote Arming (Full Arm or Stay Mode Arm)- Two digit value from 00-FF Page 89
P195E 8E 4+2 Code for Remote Disarm - Two digit value from 00-FF Page 89

Duress Alarm 4+2 Reporting Code

P195E 9E 4+2 Duress Alarm Code - Two digit value from 00-FF Page 89

Automatic Test 4+2 Reporting Code

P195E 10E 4+2 Automatic Test Code - Two digit value from 00-FF Page 89

Armed by “Arm” Button 4+2 Reporting Code

P195E 11E 4+2 Arm by “Arm” Button Code - Two digit value from 00-FF Page 89

Stay Mode Arming 4+2 Reporting Code

P195E 12E 4+2 Stay Mode Arming Code - Two digit value from 00-FF Page 89

Disarmed by “Arm” or “Stay” Button 4+2 Reporting Code

P195E 13E 4+2 Disarm by Arm or Stay Button - Two digit value from 00-FF Page 89

Armed/Disarmed by “Key-switch” 4+2 Reporting Code

P195E 14E 4+2 Arm by “Key-switch” Code - Two digit value from 00-FF Page 89
P195E 15E 4+2 Disarm by “Key-switch” Code - Two digit value from 00-FF Page 89

“Time Zone Arm Failure” 4+2 Reporting Code

P195E 16E 4+2 Time Zone Arm Failure - Two digit value from 00-FF Page 89

Keypad “Panic” Alarm 4+2 Reporting Code

P195E 17E Keypad Panic Alarm 4+2 Code - Two digit value from 00-FF Page 89

Keypad “Panic” Alarm 4+2 Restore Reporting Code

P195E 18E Keypad Panic Alarm Restore 4+2 Code - Two digit value from 00-FF Page 89

Keypad “Fire” Alarm 4+2 Reporting Code

P195E 19E Keypad Fire Alarm 4+2 Code - Two digit value from 00-FF Page 90

Keypad “Fire” Alarm 4+2 Restore Reporting Code

P195E	**20E**	**Keypad Fire Alarm Restore 4+2 Code -** Two digit value from 00-FF	Page 90

Keypad “Medical” Alarm 4+2 Reporting Code

P195E	**21E**	**Keypad Medical Alarm 4+2 Code -** Two digit value from 00-FF	Page 90

Keypad “Medical” Alarm 4+2 Restore Reporting Code

P195E	**22E**	**Keypad Medical Alarm Restore 4+2 Code -** Two digit value from 00-FF	Page 90

+++++Panel Diagnostic & Default Options+++++

Display Panel Software Version Number

P200E	**1E**	**Display the Panel Software Version Number**	Page 91

Display Keypad Address Number

P200E	**2E**	**Display Keypad Address Number**	Page 91

Display Areas Assigned to this Keypad

P200E	**3E**	**Display Areas Assigned to this Keypad**	Page 91

Display Active Time Zones

P200E	**4E**	**Display Active Time Zones**	Page 91

Display Battery Voltage

P200E	**5E**	**Display Battery Voltage**	Page 91

Walk Test Mode

P200E	**6E**	**Walk Test Mode**	Page 91

Write to EEPROM (DTU) Board

P200E	**7E**	**Write to EEPROM (DTU) Board**	Page 91

Read from EEPROM (DTU) Board

P200E	**8E**	**Read from EEPROM (DTU) Board**	Page 91

Restore User & Installer Codes plus Telephone Numbers to Defaults

P200E	**9E**	**Restore User/Installer Codes & Telephone #’s to Default Values**	Page 92

Restore All Factory Defaults

P200E	**10E**	**Restore All Factory Defaults**	Page 92

Clear Alarm Memory Buffer

P200E	**11E**	**Clear Alarm Memory Buffer**	Page 92

Initiate a Call to the Call-back

P200E	**12E**	**Initiate a Call to the Call-back**	Page 92

ELITE S QUICK START GUIDE

The default settings of this panel have been chosen to allow the system to be up and running with a minimum of programming.

Because of this there are normally only a handful of program addresses that need to be changed to get the system fully functional.

As a guide to getting the system up and running as quickly as possible we have summarised the most commonly used addresses for you below.

CODES:

P1E 1-100E Code 1 is P13E1E and is defaulted to “123”. Code 2 is P13E2E, etc up to P13E100E for code 100.

ENABLE DIALLER:

P175E 1E By default the Dialler is turned Off. To turn On the dialler you must turn on Option 1 at address P175E1E.

TELEPHONE NUMBERS:

P181E 1-8E Telephone Number 1 is P181E1E and can be up to 16 digits long. Number 2 is P182E2E, etc up to P181E8E for Phone number 8.

TELEPHONE FORMAT:

P182E 1-8E There are 9 different reporting formats that can be selected for each telephone number. The formats are listed on page 103.

ACCOUNT CODE:

P62E 1-2E Area “A” Account code is P62E1E and Area “B” Account code is P62E2E.

ARMED ENTRY DELAYS:

P144E 1-16E Zone 1 entry delay is P144E1E and can be a value of 0-9999 seconds through to Zone 16 entry delay being at address P144E16E. A value of “0” makes the zone instant.

STAY ENTRY DELAYS:

P145E 1-16E Zone 1 entry delay when armed in “Stay” Mode is P145E1E and can be a value of 0-9999 seconds through to Zone 16 Stay Mode entry delay being at address P145E16E. A value of “0” makes the zone instant.

ARMED EXIT DELAY:

P60E 1-2E Area A exit delay is programmed at P60E1E, Area B at P60E2E and can be a value of 0-255 seconds. A value of “0” makes the area arm instantly with no exit delay.

STAY EXIT DELAY:

P61E 1-2E Area A Stay Mode exit delay is programmed at P61E1E, Area B at P61E2E and can be a value of 0-255 seconds. A value of “0” arms Stay Mode instantly with no exit delay.

USER PRIVILEGES CHART

Program Location	P5E Options:	1	2	3	4	5	6	7	8
	Option 8: Can force download								
	Option 7: Learn new radio devices								
	Option 6: Change DTMF command								
	Option 5: Change clock								
	Option 4: Change phone numbers								
	Option 3: Full access								
	Option 2: Change others codes								
	Option 1: Change own code								
P1E	User codes	X	X	X					
P2E	User type			X					
P3E	User areas			X					
P4E	User access			X					
P5E	User privileges			X					
P7E	User pendant type			X					
P8E	User radio privileges			X					
P9E	User time zones			X					
P18E	Learn radio user							X	
P19E	Delete radio user							X	
P20E	Find radio user							X	
P21E	Learn access Tag/Card user							X	
P22E	Delete access Tag/Card user							X	
P23E	Find access Tag/Card user							X	
P25E12E	User options (hide user codes to installer)		X						
P26E (all)	Time/Date and Daylight Savings					X			
P170E	Change Holidays					X			
P63E	Area A & B Command Code						X		
P164E	Learn radio zone							X	
P165E	Delete radio zone							X	
P166E	Find radio zone							X	
P175E3E	Auto-answer rings				X				
P175E4E	Time to first test call				X				
P175E5E	Test call period				X				
P175E8E	Dial prefix				X				
P175E12E	Output DTMF command control code						X		
P175E13E	Microphone DTMF command control code						X		
P175E14E	Voice/Domestic DTMF acknowledge code						X		
P175E15E	Remote test initiate DTMF code						X		
P181E	Telephone numbers				X				
P194E	Divert telephone numbers				X				
P200E1E	Display panel version #		X	X	X	X	X	X	X
P200E2E	Display keypad address		X	X	X	X	X	X	X
P200E3E	Areas assigned to this keypad		X	X	X	X	X	X	X
P200E4E	Display active time zones		X	X	X	X	X	X	X
P200E5E	Display battery voltage		X	X	X	X	X	X	X
P200E6E	Enter walk test mode							X	
P200E12E	Initiate call back			X					X

TELECOM INTERFACE

The dialler facility on this controller has been designed to provide optimum flexibility in the way in which alarm events are reported. This flexibility includes options for reporting to a central monitoring station using Contact ID format, a Domestic reporting option using alternating siren tones, a format for reporting alarms to an alpha numeric pager and a powerful Speech Dialler.

In accordance with the statutory requirements of the Telepermit standards we must bring the following points to your attention;
A readily accessible disconnect device shall be incorporated into the 230V fixed wiring.
In the event of any problem with this device, the by-pass switch should be operated. The user is to then arrange with the installer of the device to make the necessary repairs. Should the matter be reported to Telecom as a wiring fault, and the fault be proven to be due to the alarm panel, a call out charge will be incurred.

Should the control panel require relocation the Telecom connection must be disconnected before the power is disconnected. Similarly when reconnecting the dialler, it is necessary to power up the panel before connecting the dialler to the Telecom Network.

Connection to the Telecom network should be made in accordance with Access Standards Newsletter #65 dated November 1993. This connection is to be readily accessible to allow disconnection in the event of a fault. An example of this connection method is shown below.

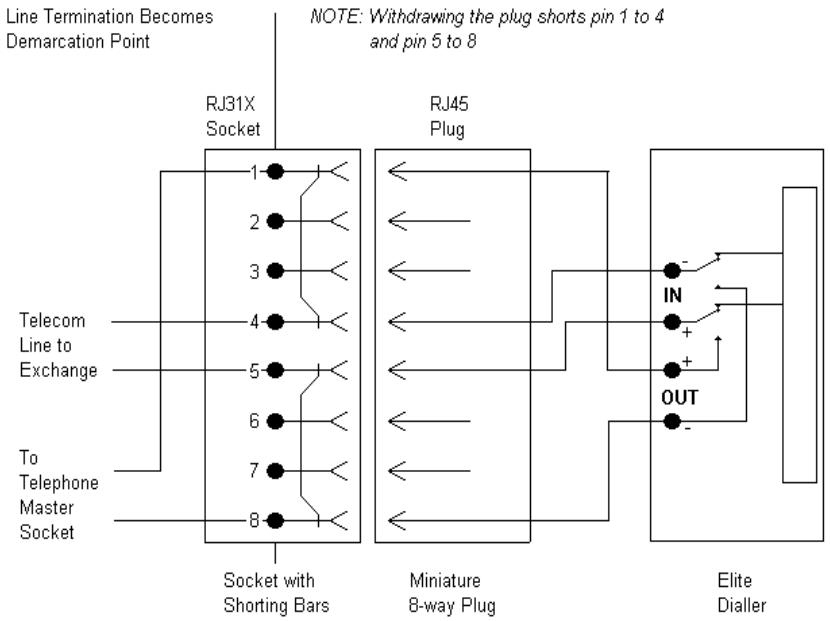

NOTE: ***The telephone line must not enter the cabinet through the same cable entry hole as any 230 volt mains cables. A separate cable entry must be used for 230 volt cabling***

When using one of the knock-outs around the side of the cabinet for supply entry, a suitable bushing must be used where the supply cables pass through a knock-out.

The transmit level from this device is set at a fixed level and because of this there may be circumstances where this device does not give its optimum performance. Before reporting such occurrences as faults, please check the line with a standard Telepermitted telephone, and do not report a fault unless the telephone performance is impaired.

This automatic dialling equipment shall not be set up to make calls to the Telecom "111" Emergency Service

Contact ID Code Summary

In addition to the programmable Contact ID Event Code assignments defined at P157E, P158E, P159E, P175E (10E-12E) there are a number of fixed event codes. The programmable and fixed event codes are all listed in the table below. Associated with the fixed and programmable event codes, there are a number of extension codes, that are also listed below. The list of extension codes is for your reference only and can not be changed in programming.

Event Type	Event Code	Extension	Comment
System Tamper	137	000	Panel & Sat Tamper etc
Zone Alarm (wired or wireless)	130	001 to 016	Alarm on Zone 1-16
Zone Tamper - Low (short circuit)	383	001 to 008	Zone Input 1-8 short circuit
Zone Tamper - High (open circuit)	383	009 to 016	Zone Input 1-8 open circuit
Zone Tamper - Radio Zone	383	001 to 016	Radio Zone 1-16
Zone Near Alarm	138	001 to 016	Zone Input 1-16
Zone Confirmed Alarm	139	001 to 016	Zone Input 1-16
Radio PIR / Reed Switch Battery Low	384	001 to 016	Radio Zone 1-16
Radio PIR Supervised Alarm	381	001 to 016	Supervised Radio Zone 1-16
Sensor-watch Alarm	391	001 to 016	Zone 1-16
Zone Excludes	570	001 to 016	Exclude Zone 1-16
Keypad Panic (or 1&3)	120	001 to 008	Panic at keypad #1-8
Radio-Key Panic	120	021 to 100	Panic by Radio User # 21-100
Keypad Fire (4&6)	110	001 to 008	Fire Alarm at keypad #1-8
Keypad Medical (7&9)	100	001 to 008	Medical Alarm at keypad #1-8
Keypad Tamper Switch Alarm	137	101 to 108	Keypad 1-8 Tamper Switch Activated
Wrong Code Alarm	461	001 to 008	4 Incorrect code entries at KP # 1-8
Arm/Disarm by "ARM key (Quick Arm)	408	000	Arm/Disarm by single button
Arm/Disarm by user code	401	001 to 100	Arm/Disarm by User #1-100
Arm/Disarm by Radio-key	400	021 to 100	Arm/Disarm by Radio User #21-100
Arm/Disarm by Key-switch	409	000	Key-switch # 1 Arm/Disarm
	409	001	Key-switch # 2 Arm/Disarm
Arm/Disarm by DTMF or Up/Download	407	000	Remote Arm/Disarm
Arm/Disarm by Time-Zone	403	000	Time-Zone Arm/Disarm
Latchkey Disarm	642	001 to 100	Latchkey User Disarm
Fail to Arm on Time-Zone	455	000	Auto Arm fail
Delinquency Alarm	454	000	System not Armed within # days
Stay Mode Arm/Disarm (part set)	441	000	Arm by “Stay” Button
Stay Mode Arm/Disarm (part set)	441	001 to 100	Stay Mode Arm by User # 1-100
Stay Mode Arm/Disarm by Key-switch	442	000	Stay Mode Arm by Key-switch # 1
Stay Mode Arm/Disarm by Key-switch	442	001	Stay Mode Arm by Key-switch # 2
System Battery Low	302	000	Control Panel Battery low
Mains Fail	301	000	Mains (AC) fail
Fuse Fail	312	000	Fuse 1 or 2 Fail
Radio-key Battery Low	384	021 to 100	Radio-key User #21-100 low batt.
Radio-PIR / Reed Switch Battery Low	384	001 to 016	Radio Zone 1-16
Automatic TEST Calls	602	000	24 hour test
Manual TEST Calls	601	000	User generated Test Call
Phone Line Failure	351	000	Reported when line is restored
Duress Alarm	121	001 to 008	Duress at Keypad #1-8
Entered Program Mode	627	001 to 008	Program Mode entered at KP # 1-8
Left Program Mode	628	001 to 008	Program Mode entered at KP # 1-8
Output 1 or 2 Tamper	323	001 or 002	O/P 1 or 2 wires cut.

Software change Update Notice

There are currently no updates.