1759EX

SYSTEM PROGRAMMING GUIDE

Software Version 1.0

DEFAULT INSTALLER CODE

000000 (see section [281] on page 18)

DEFAULT SYSTEM MASTER CODE

123456 (see section [301] on page 18)

HOW DO I ENTER PROGRAMMING MODE?

STEP 1: Press **[ENTER]**
STEP 2: Enter your **[INSTALLER CODE]**
STEP 3: Enter 3-digit **[SECTION]** you wish to program
STEP 4: Enter required **[DATA]**

DECIMAL AND HEXADECIMAL PROGRAMMING TABLE

Value or Action	What Do I Press?	What Do I See?		
		10-Zone LED	16-Zone LED	LCD
Values 1 to 9	[1] to [9]	[1] to [9]	[1] to [9]	[1] to [9]
A (hexa only)	[0]	[0 (10)]	[10]	0
B (hexa only)	[STAY]	[STAY]	[11]	B
C (hexa only)	[BYP]	[BYP]	[12]	C
D (hexa only)	[MEM]	[MEM]	[13]	D
E (hexa only)	[TBL] / [TRBL]	[TBL]	[14]	E
F (hexa only)	[PG] / [FNC1]	[PG]	[15]	F
Exit Without Saving	[CLEAR]	[ENTER] flashes	[ARM1] & [STAY1] flash	"SECTION [ ]"
Erase Current Digit	[FORCE]	Displays next digit or next section		
Save Data (hexa only)	[ENTER]	Advances to the next section		

TROUBLE DISPLAY

Press the **[TBL]** or **[TRBL]** key to view the *Trouble Display*. Please note that the keypad can be programmed to emit a BEEP every 5 seconds whenever a new trouble condition has occurred. Press the **[TBL]** or **[TRBL]** key to stop the beeping.

[1] - No Battery or Low Battery
[2] - Wireless Transmitter Low Battery
[3] - Power Failure
[4] - Bell Output Disconnected
[5] - Maximum Bell Current
[6] - Maximum Auxiliary Current
[7] - Communicator Report Failure
[8] - Timer Loss**
[9] - Tamper or Zone Wiring Failure*
[10] - Telephone Line Monitoring Failure
[11]/[STAY] - Fire Loop Trouble*
[12]/[BYP] - Module Loss
[13]/[MEM] - Wireless Transmitter Supervision Loss*
[16]/[FORCE] and **[TBL]/[TRBL]** flashes - Keypad Fault

* press the illuminated key ([9], [STAY] or [MEM]) to view which zones are causing the trouble. Enter the Installer Code to clear Tamper troubles.
** press [8] to re-program the time.

TABLE OF CONTENTS

Default Installer Code 1
Default System Master code 1
How Do I Enter Programming Mode? 1
Decimal and Hexadecimal Programming Table 1
Trouble Display 1
Data Display Mode (LED Keypads Only) 5
Configuring The 1686H, 1686V and 1689 Keypads (v2.0 or higher) 5
Configuring The 1686H, 1686V and 1689 Keypads (prior to V2.0) 6
Zone Programming 6
System Timers 8
Programmable Outputs 9
System Options 12
Communication Settings 15
Report Codes 16
System Settings 18
User Code Options 18
Reprogram ALL Modules 19
Paradox Memory Key (PMC-3) 19

4-PGM Output Modules V2.0 20
PGM Programming 20

Printer Module V2.0 21
PGM Programming 22
clock Programming 22

Voice-assisted Arm/Disarm Bus Module V2.0 23

Wireless Expansion Zone Programming 24
Zone Assignment 24
Serial Number Display 24
Signal Strength Display 24
Remote Control User Assignment 25
Button Options 25
Remote Control Assignment 26

Zone Expansion Bus Modules 27
PGM Programming (SPC-ZX8 and APR3-ZX8 Only) 27

User Operation 28
Partitioning 28
Programming Access Codes 28
Programming Chime Zones 29
Keypad Muting 29
Keypad Backlight (1686H and 1686V Only) 29
Quick Function Keys 29

Appendix A - Ademco CID Report Code List (Prog.) 30

Appendix B - Ademco CID Report Code List (all Codes) 31

Bus Module Connections 32
Printer Module (APR3-PRT1) 32
4-PGM Output Module (APR3-PGM4) 33

4-ZONE EXPANSION BUS MODULE (SPC-ZX4 AND APR3-ZX4) 33
VOICE-ASSISTED ARM/DISARM BUS MODULE (APR3-ADM2) 34
8-ZONE EXPANSION BUS MODULES (SPC-ZX8 AND APR3-ZX8) 35

HARDWARE CONNECTIONS 36
SINGLE ZONE INPUTS 36
CONNECTING FIRE CIRCUITS, KEYSWITCHES AND PGMS 36
ALARM RELAY AND PGM CONNECTIONS 37
CONNECTING MORE THAN TWO KEYPADS 37
AC POWER & BACKUP BATTERY CONNECTIONS 37
SPECTRA 1759EX PCB LAYOUT 38

DATA DISPLAY MODE (LED Keypads Only)

View the section's programming one digit at a time. Does not function with sections using *Feature Select Programming*.

To access the *Data Display Mode*, press the **[ENTER]** key after entering a section and before entering any data. The three LEDs as indicated below will begin to flash indicating that you are in the *Data Display Mode*.

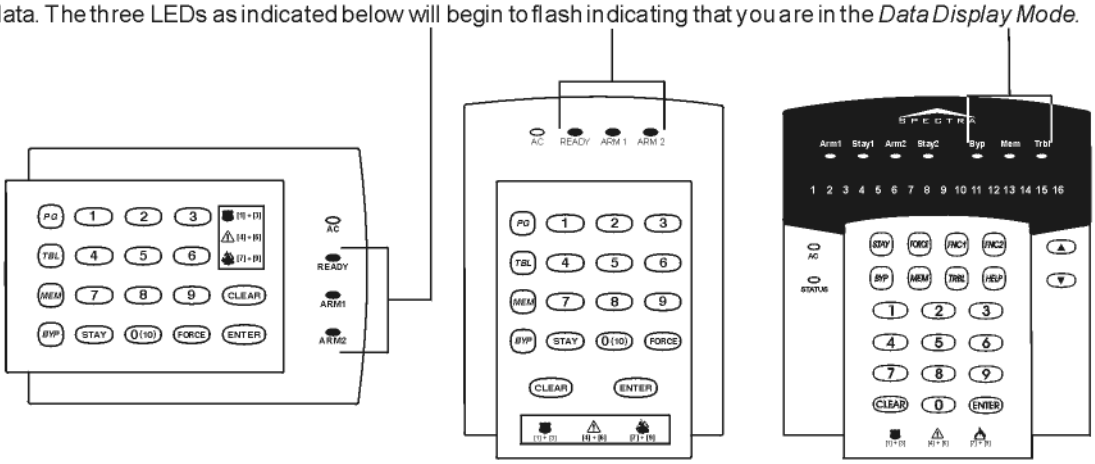

1686H **1686V** **1689**

Each time the **[ENTER]** key is pressed, the keypad will display the next digit in the current section and will continue through all the following sections one digit at a time without changing the programmed values. Not available for sections using the *Multiple Feature Select Method*. Press the **[CLEAR]** key at any time to exit the *Data Display Mode*.

CONFIGURING THE 1686H, 1686V and 1689 KEYPADS (V2.0 or higher)

The keypad's zone number, EOL definition and tamper switch are programmed through the keypad's programming mode. To do so:

How Do I Configure The Keypad?
STEP 1: Press **[ENTER]**
STEP 2: Enter your **[INSTALLER CODE]** (default: 000000)
STEP 3: Press the **[PG]** (1686H/V) / **[FNC1]** (1689) key and hold it for 3 seconds.
STEP 4: Press the desired key ([1] to [3]. See below)
STEP 5: Press **[ENTER]** to exit programming mode

PLEASE NOTE: After two minutes, the keypad exits programming mode.

Key [1] - Keypad Zone Selection

Key [1] determines whether the keypad's zone is *Keypad Zone 1* or *Keypad Zone 2*. When key [1] is OFF (not illuminated), the keypad's zone is *Keypad Zone 1*. When key [1] is ON (illuminated), the keypad's zone is *Keypad Zone 2*.

Key [1] OFF - Keypad Zone 1 (default)
Key [1] ON - Keypad Zone 2

Key [2] - EOL Definition

Key [2] determines the keypad zone's EOL definition. When key [2] is OFF (not illuminated), EOL is disabled and the keypad zone uses the on-board EOL resistor. When key [2] is ON (illuminated), EOL is enabled and the keypad zone requires that an external EOL resistor be connected (refer to "Spectra 1759EX PCB Layout" on page 38 for more details).

Key [2] OFF - EOL disabled
Key [2] ON - EOL enabled (default)

Key [3] - On-Board Tamper

Key [3] enables or disables the keypad's on-board tamper switch. When key [3] is OFF (not illuminated), the tamper switch is disabled. When key [3] is ON (illuminated), the tamper switch is enabled.

Key [3] OFF - On-board tamper switch disabled
Key [3] ON - On-board tamper switch enabled

PLEASE NOTE: The keypad can be ordered with or without a tamper switch. If the keypad has no tamper switch, key [3] will be OFF by default. If the keypad has a tamper switch, key [3] will be ON by default.

CONFIGURING THE 1686H, 1686V and 1689 KEYPADS (Prior to V2.0)

The keypad's zone number and EOL definition are defined through the jumpers located on the PCB board. The jumpers are as follows:

J1 - Keypad Zone Select Jumper

Jumper J1 determines whether the keypad's zone is Keypad Zone 1 or Keypad Zone 2. When the jumper is OFF, the keypad's zone is Keypad Zone 2. When the jumper is ON, the keypad's zone is Keypad Zone 1.

J1 OFF - Keypad Zone 2
J1 ON - Keypad Zone 1

J2 - EOL Definition Jumper

Jumper J2 determines the keypad zone's EOL definition. When the jumper is OFF, EOL is disabled and the keypad zone uses the on-board EOL resistor. When the jumper is ON, EOL is enabled and the keypad zone requires that an external EOL resistor be connected (refer to "Spectra 1759EX PCB Layout" on page 38 for more details).

J2 OFF - EOL disabled
J2 ON - EOL enabled

ZONE PROGRAMMING

When programming zones, the zone assignments are dependent on where the detection devices in the system are connected. **Do not assign inputs from different modules to the same expansion input.** In installations that require using mostly the expansion inputs, refer to *Reassign Zones to Expansion Inputs* (see section [126] option [8] on page 12).

Zone Recognition Table

Device connected to which input?	**1759EX**
Control Panel	
Input 1 =	Zone 1
Input 2 =	Zone 2
Input 3 =	Zone 3
Input 4 =	Zone 4
Input 5 =	Zone 5
Keypad	
Zone 1 =	Zone 6
Zone 2 =	Zone 7
Expansion	
Input 1 =	Zone 8
Input 2 =	Zone 9
Input 3 =	Zone 10
Input 4 =	Zone 11
Input 5 =	Zone 12
Input 6 =	Zone 13
Input 7 =	Zone 14
Input 8 =	Zone 15

How Do I Program the Zones?
STEP 1: Press the **[ENTER]** key
STEP 2: Enter the **[INSTALLER CODE]** (Default: 000000)
STEP 3: Enter 3-digit **[SECTION]**
STEP 4: Enter one digit from the **Zone Definition** table
STEP 5: Enter one digit from the **Partition Assignment** table
STEP 6: Select one or more options from the **Zone Options** table
STEP 7: Press the [ENTER] key

ZONE DEFINITION

Empty - Zone Disabled
1 - Entry Delay 1
2 - Entry Delay 2
3 - Follow
4 - Instant
5 - 24Hr. Burglary
6 - 24Hr. Buzzer

Additional definitions for on-board terminals:
7 - Keyswitch
8 - Fire 24 Hr.
9 - Delayed Fire 24 Hr.

PARTITION ASSIGNMENT

Empty - Zone Disabled
1 - Partition 1
2 - Partition 2
3 - Both Partitions

ZONE OPTIONS

1 - Auto Zone Shutdown
2 - Bypassable Zone
3 - Stay Zone

4 -	**5** -	Zone Alarm Type
off	off	Audible alarm (steady)
off	on	Audible alarm (pulsed)
on	off	Silent alarm
on	on	Generates a report only

6 - Intellizone
7 - Delay alarm transmission
8 - Force Zone

KEYSWITCH OPTIONS

1 - off = Maintained
on = Momentary
2 - off = Regular Arm
on = Stay Arm

[FORCE] key = **empty**

First Digit

Second Digit

Section	Description	Zone Definition	Partition Assignment	Zone Options
[001] = Zone 01:				1 2 3 4 5 6 7 8
[002] = Zone 02:				1 2 3 4 5 6 7 8
[003] = Zone 03:				1 2 3 4 5 6 7 8
[004] = Zone 04:				1 2 3 4 5 6 7 8
[005] = Zone 05:				1 2 3 4 5 6 7 8
[006] = Zone 06:				1 2 3 4 5 6 7 8
[007] = Zone 07:				1 2 3 4 5 6 7 8
[008] = Zone 08:				1 2 3 4 5 6 7 8
[009] = Zone 09:				1 2 3 4 5 6 7 8
[010] = Zone 10:				1 2 3 4 5 6 7 8
[011] = Zone 11:				1 2 3 4 5 6 7 8
[012] = Zone 12:				1 2 3 4 5 6 7 8
[013] = Zone 13:				1 2 3 4 5 6 7 8
[014] = Zone 14:				1 2 3 4 5 6 7 8
[015] = Zone 15:				1 2 3 4 5 6 7 8
	Defaults =	**Empty**	**Partition 1**	**1 and 2 ON**

Only the control panel's on-board inputs can be defined as a Fire, Delayed Fire or a Keyswitch zone. The on-board zones are zones 01 to 05.

SYSTEM TIMERS

Section #		Decimal Value (000 to 255)	Description	Default
[050]	___/___/___	x 10 msec.	ZONE SPEED (ZONE 1)	*600 msec.*
[051]	___/___/___	x 10 msec.	ZONE SPEED (ZONE 2)	*600 msec.*
[052]	___/___/___	x 10 msec.	ZONE SPEED (ZONE 3)	*600 msec.*
[053]	___/___/___	x 10 msec.	ZONE SPEED (ZONE 4)	*600 msec.*
[054]	___/___/___	x 10 msec.	ZONE SPEED (ZONE 5)	*600 msec.*
[055]	___/___/___	x 10 msec.	ZONE SPEED (ZONE 6)	*600 msec.*
[056]	___/___/___	x 10 msec.	ZONE SPEED (ZONE 7)	*600 msec.*
[057]	___/___/___	x 10 msec.	ZONE SPEED (ZONE 8)	*600 msec.*
[058]	___/___/___	x 10 msec.	ZONE SPEED (ZONE 9)	*600 msec.*
[059]	___/___/___	x 10 msec.	ZONE SPEED (ZONE 10)	*600 msec.*
[060]	___/___/___	x 10 msec.	ZONE SPEED (ZONE 11)	*600 msec.*
[061]	___/___/___	x 10 msec.	ZONE SPEED (ZONE 12)	*600 msec.*
[062]	___/___/___	x 10 msec.	ZONE SPEED (ZONE 13)	*600 msec.*
[063]	___/___/___	x 10 msec.	ZONE SPEED (ZONE 14)	*600 msec.*
[064]	___/___/___	x 10 msec.	ZONE SPEED (ZONE 15)	*600 msec.*
[065]			FUTURE USE	
[066]	___/___/___	seconds (000 = follow Deactivation Event)	PGM1 TIMER	*5 sec.*
[067]	___/___/___	seconds (000 = follow Deactivation Event)	PGM2 TIMER	*5 sec.*
[068]	___/___/___	seconds (000 = follow Deactivation Event)	GLOBAL PGM TIMER	*5 sec.*
[069]	___/___/___	seconds	ENTRY DELAY 1	*45 sec.*
[070]	___/___/___	seconds	ENTRY DELAY 2	*45 sec.*
[071]	___/___/___	seconds	EXIT DELAY 1	*30 sec.*
[072]	___/___/___	seconds	EXIT DELAY 2	*30 sec.*
[073]	___/___/___	minutes (000 = no bell on alarm)	BELL CUT-OFF TIMER (PARTITION 1)	*4 min.*
[074]	___/___/___	minutes (000 = no bell on alarm)	BELL CUT-OFF TIMER (PARTITION 2)	*4 min.*
[075]	___/___/___	x 15 minutes (000 = disabled)	NO MOVEMENT TIMER (PARTITION 1)	*Disabled*
[076]	___/___/___	x 15 minutes (000 = disabled)	NO MOVEMENT TIMER (PARTITION 2)	*Disabled*
[077]	___/___/___	seconds (minimum 10 sec.)	ANSWERING MACHINE OVERRIDE DELAY	*Disabled*
[078]	___/___/___	(000 = no answer, maximum = 15 rings)	NUMBER OF RINGS	*8 rings*
[079]	___/___/___	x 2 sec. (minimum 32 sec.)	TLM FAIL TIMER	*32 sec.*
[080]	___/___/___	seconds	DELAY ALARM TRANSMISSION	*Disabled*
[081]	___/___/___	(000 = 16, maximum = 16)	MAXIMUM DIALING ATTEMPTS	*8 attempts*
[082]	___/___/___	seconds	DELAY BETWEEN ATTEMPTS	*20 sec.*
[083]	___/___/___	seconds	PAGER DELAY	*5 sec.*
[084]	___/___/___	seconds (minimum 10 sec.)	INTELLIZONE DELAY	*48 sec.*
[085]	___/___/___	seconds	RECENT CLOSING DELAY	*No delay*
[086]	___/___/___	minutes	POWER FAILURE REPORT DELAY	*15 min.*
[087]	___/___/___	days (000 = disabled)	AUTO TEST REPORT	*Disabled*
[088]	___/___/___	000 to 127 = +1 to +127 seconds 128 to 255 = -1 to -127 seconds	CLOCK ADJUST	*Disabled*
[089]	___/___/___	(000 = disabled, maximum = 15)	AUTO ZONE SHUTDOWN COUNTER	*5*
[090]	___/___/___	minutes (000 = disabled)	RECYCLE ALARM DELAY	*Disabled*
[091]	___/___/___	(000 = disabled)	RECYCLE ALARM COUNTER	*Disabled*
[092]	___/___/___	attempts before locking (000 = disabled)	KEYPAD LOCKOUT	*Disabled*
[093]	___/___/___	minutes (000 = disabled)	KEYPAD LOCKOUT DELAY	*Disabled*
[094]	___/___/___	seconds (000 = disabled)	PANIC LOCKOUT TIMER	*Disabled*
[110]	___/___ : ___/___	hours (00 to 23) : minutes (00 to 59)	AUTO TEST REPORT (TIME OF DAY)	*Disabled*
[111]	___/___ : ___/___	hours (00 to 23) : minutes (00 to 59)	AUTO-ARM TIME (PARTITION 1)	*Disabled*
[112]	___/___ : ___/___	hours (00 to 23) : minutes (00 to 59)	AUTO-ARM TIME (PARTITION 2)	*Disabled*

PROGRAMMABLE OUTPUTS

Each PGM Deactivation event can be used as another start (activation) event if their respective PGM timer (see sections [066] to [068]) is programmed with a value other than 000.

Example: section [120] = 05 03 02: this means PGM1 will activate whenever partition 2 is Stay Armed.

Section #		Event Group #	Sub-Group #	Partition #
[120]	PGM 1 PGM Activation Event	___/___	___/___	___/___
[121]	PGM 1 PGM Deactivation Event	___/___	___/___	___/___
[122]	PGM 2 PGM Activation Event	___/___	___/___	___/___
[123]	PGM 2 PGM Deactivation Event	___/___	___/___	___/___
[124]	Global PGM Activation Event	___/___	___/___	___/___
[125]	Global PGM Deactivation Event *Used to activate PGMs on expansion modules & LCD keypads*.	___/___	___/___	___/___

01 = Partition 1
02 = Partition 2
99 = Any Partition

The Sub-Groups proceeded by "(Partition 1)" cannot be assigned to activate Partition 2.

Event Group #	Sub-Group #
00 = Zone OK	01 to 15 = Zones 1 to 15 99 = Any Zone
01 = Zone Open	01 to 15 = Zones 1 to 15 99 = Any Zone
02 = Partition Status	00 = System not ready (*Partition 1 only*) 01 = System ready (*Partition 1 only*) 02 = Steady Alarm in Partition 03 = Pulsed Alarm in Partition 04 = Pulsed or Steady Alarm in Partition 05 = Alarm in Partition Restored 06 = Bell Squawk Activated (*Partition 1 only*) 07 = Bell Squawk Deactivated (*Partition 1 only*) 08 = Ground start (*Partition 1 only*) 09 = Disarm Partition 10 = Arm Partition 11 = Entry Delay (breach when system is armed) 99 = Any Sub-Group
05 = Non-Reportable Events	00 = Telephone Line Trouble (*Partition 1 only*) 01 = [PG] or [FNC1] key was pressed (*Partition 1 only*) 02 = Instant Arming 03 = Stay Arming 04 = Force Arming 05 = Fast Exit (Force & Regular Only) 06 = PC Fail to Communicate (*Partition 1 only*) 07 = Midnight (*Partition 1 only*) 99 = Any Sub-Group (*Partition 1 only, except 02 to 05*)
06 = Arm/Disarm with Remote Control	01 to 08 = Remote Controls 1 to 8 99 = Any Remote Control
07 = Button Pressed on Remote *(see button option "B" on page 25)*	01 to 08 = Remote Controls 1 to 8 99 = Any Remote Control
08 = Button Pressed on Remote *(see button option "C" on page 25)*	01 to 08 = Remote Controls 1 to 8 99 = Any Remote Control
09 = Button Pressed on Remote *(see button option "D" on page 25)*	01 to 08 = Remote Controls 1 to 8 99 = Any Remote Control

Event Group #	Sub-Group #
10 = Bypass Programming	01 to 48 = User Code Numbers 001 to 048 99 = Any User Code
11 = User Activated PGM	01 to 48 = User Code Numbers 001 to 048 (*Partition 1 only*) 99 = Any User Code
12 = Zone with Delay Transmission Option Enabled is Breached	01 to 15 = Zones 1 to 15 99 = Any Zone
13 = Arm with User Code	01 to 48 = User Code Numbers 001 to 048 99 = Any User Code
14 = Special Arm	00 = Auto Arming (timed/no movement) 01 = Late to Close (Auto-Arming failed) 02 = No Movement Auto-Arming 03 = Partial Arming (Stay, Force, Instant, Bypass) 04 = One-Touch Arming 05 = Arm with WinLoad Software 99 = Any Sub-Group
15 = Disarm with User Code	01 to 48 = User Code Numbers 001 to 048 99 = Any User Code
16 = Disarm After Alarm w/ User Code	01 to 48 = User Code Numbers 001 to 048 99 = Any User Code
17 = Cancel Alarm with User Code	01 to 48 = User Code Numbers 001 to 048 99 = Any User Code
18 = Special Disarm	00 = Cancel Auto Arm (timed/no movement) 01 = Disarm with WinLoad Software 02 = Disarm after alarm with WinLoad Software 03 = Cancel Alarm with WinLoad Software 99 = Any Sub-Group
19 = Zone Bypassed on Arming	01 to 15 = Zones 1 to 15 99 = Any Zone
20 = Zone in Alarm	01 to 15 = Zones 1 to 15 99 = Any Zone
21 = Fire Alarm	01 to 05 = Zones 1 to 5 (on-board inputs) 99 = Any Zone
22 = Zone Alarm Restore	01 to 15 = Zones 1 to 15 99 = Any Zone
23 = Fire Alarm Restore	01 to 05 = Zones 1 to 5 (on-board inputs) 99 = Any Zone
24 = Special Alarm	00 = Emergency Panic 01 = Auxiliary Panic 02 = Fire Panic 03 = Recent Closing 04 = Auto Zone Shutdown 05 = Duress Alarm 06 = Keypad Lockout 99 = Any Sub-Group
25 = Auto Zone Shutdown	01 to 15 = Zones 1 to 15 99 = Any Zone
26 = Zone Tamper	01 to 15 = Zones 1 to 15 99 = Any Zone
27 = Zone Tamper Restore	01 to 15 = Zones 1 to 15 99 = Any Zone

Event Group #	Sub-Group #
28 = System Trouble	01 = AC Loss: only after *Power Failure Delay* has elapsed (*Partition 1 only*) 02 = Battery Failure (*Partition 1 only*) 03 = Auxiliary current overload (*Partition 1 only*) 04 = Bell current overload (*Partition 1 only*) 05 = Bell disconnected (*Partition 1 only*) 06 = Timer Loss (*Partition 1 only*) 07 = Fire Loop Trouble (*Partition 1 only*) 08 = Future Use 09 = Module Fault (*Partition 1 only*) 10 = Printer Fault (*Partition 1 only*) 11 = Fail to Communicate (*Partition 1 only*) 99 = Any Sub-Group (*Partition 1 only*)
29 = System Trouble Restore	00 = TLM restore (*Partition 1 only*) 01 = AC Loss restore (*Partition 1 only*) 02 = Battery Failure restore (*Partition 1 only*) 03 = Auxiliary current overload restore (*Partition 1 only*) 04 = Bell current overload restore (*Partition 1 only*) 05 = Bell disconnected restore (*Partition 1 only*) 06 = Timer Programmed (*Partition 1 only*) 07 = Fire Loop Trouble restore (*Partition 1 only*) 08 = Future Use 09 = Module Fault restore (*Partition 1 only*) 10 = Printer Fault restore (*Partition 1 only*) 11 = Fail to Communicate restore (*Partition 1 only*) 99 = Any Trouble Restore (*Partition 1 only*)
30 = Special Reporting	00 = System Power Up (*Partition 1 only*) 01 = Test Report (*Partition 1 only*) 02 = WinLoad Software Access (*Partition 1 only*) 03 = WinLoad Software Access finished (*Partition 1 only*) 04 = Installer enters programming mode (*Partition 1 only*) 05 = Installer exits programming mode (*Partition 1 only*) 99 = Any Sub-Group (*Partition 1 only*)
31 = Wireless Transmitter Supervision Loss	01 to 15 = Zones 1 to 15 99 = Any Zone
32 = Wireless Transmitter Supervision Loss Restore	01 to 15 = Zones 1 to 15 99 = Any Zone
33 = Arming with a Keyswitch	01 to 05 = Zones 1 to 5 (on-board inputs) 99 = Any Zone
34 = Disarming with a Keyswitch	01 to 05 = Zones 1 to 5 (on-board inputs) 99 = Any Zone
35 = Disarm after Alarm with a Keyswitch	01 to 05 = Zones 1 to 5 (on-board inputs) 99 = Any Zone
36 = Cancel Alarm with a Keyswitch	01 to 05 = Zones 1 to 5 (on-board inputs) 99 = Any Zone
37 = Wireless Transmitter Low Battery	01 to 15 = Zones 1 to 15 99 = Any Zone
38 = Wireless Transmitter Low Battery Restore	01 to 15 = Zones 1 to 15 99 = Any Zone

Event Group #	Sub-Group #	Partition #
80 = PGM follows Clock (APR3=PGM4 only)	HH = hour according to 24hr. clock	MM = minutes according to 24hr. clock

SYSTEM OPTIONS

Bold = Default Setting

SECTION [126]: General Options

Option		OFF	ON
[1]	*Confidential Mode*	☐ **Disabled**	☐ Enabled
[2]	*To exit Confidential Mode*	☐ **Enter Access Code**	☐ Press a Key
[3]	*Confidential Mode timer*	☐ **2 minutes**	☐ 5 seconds
[4]	*PGM1 normal state*	☐ **Normally Open (N.O.)**	☐ Normally Closed (N.C.)
[5]	*PGM2 normal state*	☐ **Normally Open (N.O.)**	☐ Normally Closed (N.C.)
[6]	*Global PGM normal state*	☐ **Normally Open (N.O.)**	☐ Normally Closed (N.C.)
[7]	*Reassign Keypad Zone 2*	☐ **Disabled**	☐ Enabled
[8]	*Reassign zones to expansion inputs**	☐ **Disabled**	☐ Enabled

* *Reassign Zones to Expansion Inputs* changes the zone numbering to increase the number of expansion inputs that can be displayed on 10-Zone LED Keypads. Refer to *Spectra 1759EX Reference & Installation Manual* for details.

SECTION [127]: General Options

Option		OFF	ON
[1]	*Partitioning*	☐ **Disabled**	☐ Enabled
[2]	*Access code length*	☐ 6-digits	☐ **4-digits**
[3]	*Keypad audible trouble warning*	☐ Disabled	☐ **Enabled**
[4]	*Lock System Master Code*	☐ **Disabled**	☐ Enabled
[5]	*Battery charge current*	☐ **350mA**	☐ 700mA
[6]	*User Code 048 is a Duress Code*	☐ **Disabled**	☐ Enabled
[7]	*Alarm relay follows*	☐ **Bell Output**	☐ Global PGM
[8]	*Future use*	☐ N/A	☐ N/A

SECTION [128]: General Options

Option		OFF	ON
[1]	*Panic 1: keys [1] & [3]*	☐ **Disabled**	☐ Enabled
[2]	*Panic 2: keys [4] & [6]*	☐ **Disabled**	☐ Enabled
[3]	*Panic 3: keys [7] & [9]*	☐ **Disabled**	☐ Enabled
[4]	*Panic 1: silent or audible*	☐ **Silent**	☐ Audible
[5]	*Panic 2: silent or audible*	☐ **Silent**	☐ Audible
[6]	*Panic 3: silent or fire*	☐ **Silent**	☐ Fire
[7]	*Keypad 1 tamper supervision*	☐ **Disabled**	☐ Enabled
[8]	*Keypad 2 tamper supervision*	☐ **Disabled**	☐ Enabled

SECTION [129]: General Options

Option		OFF	ON
[1]	*PGM2 output activation option*	☐ **Steady**	☐ Pulse (flash)
[2]	*PGM2 pulse once every 30 sec. if system armed*	☐ **Disabled**	☐ Enabled
[3]	*PGM2 pulse on Arm, twice on Disarm*	☐ **Disabled**	☐ Enabled
[4]	*ZX4 & ZX8 zone expansion module supervision*	☐ **Disabled**	☐ Enabled
[5]	*Future use*	☐ N/A	☐ N/A
[6]	*Wireless module low battery supervision*	☐ **Disabled**	☐ Enabled
[7]	*4-PGM Output Module supervision (APR3-PGM4)*	☐ **Disabled**	☐ Enabled
[8]	*Printer Module supervision (APR3-PRT1)*	☐ **Disabled**	☐ Enabled

Bold = Default Setting

SECTION [130]: Arming/Disarming Options

Option		OFF	ON
[1]	*One-touch Regular Arming*	☐ **Disabled**	☐ Enabled
[2]	*One-touch Stay Arming*	☐ **Disabled**	☐ Enabled
[3]	*One-touch Force Arming*	☐ **Disabled**	☐ Enabled
[4]	*One-touch bypass programming*	☐ **Disabled**	☐ Enabled
[5]	*Restrict arming on battery failure*	☐ **Disabled**	☐ Enabled
[6]	*Restrict arming on Tamper failure*	☐ **Disabled**	☐ Enabled
[7]	*Bell Squawk on Arm/Disarm with keypad*	☐ **Disabled**	☐ Enabled
[8]	*Beep on exit delay*	☐ Disabled	☐ **Enabled**

SECTION [131]: Arming/Disarming Options

Option		OFF	ON
[1]	*Report Disarming*	☐ Always	☐ **Only after alarm**
[2]	*Regular Arming switches to Force Arming*	☐ **Disabled**	☐ Enabled
[3]	*Bell Squawk on Arm/Disarm with remote control (must be enabled for UL installations)*	☐ **Disabled**	☐ Enabled
[4]	*No exit delay when Arming with a remote control*	☐ **Disabled**	☐ Enabled
[5]	*No exit delay beeps and no Bell Squawk when Stay Arming*	☐ **Disabled**	☐ Enabled
[6]	*Restrict arming on wireless transmitter supervision loss*	☐ **Disabled**	☐ Enabled
[7]	*Generate supervision loss if detected on bypassed wireless zone*	☐ **Yes**	☐ No
[8]	*Future Use*	☐ N/A	☐ N/A

SECTION [132]: Zone Options

Option		OFF	ON
[1]&[2]	**Tamper Recognition Options**	☐ see table ☐ see table	☐ see table ☐ see table

[1]	[2]	
OFF	**OFF**	**Disabled** (default)
OFF	ON	When disarmed: GENERATES TROUBLE ONLY When armed: Follows *Zone Alarm Types*
ON	OFF	When disarmed: GENERATES SILENT ALARM When armed: Follows *Zone Alarm Types*
ON	ON	When disarmed: GENERATES AUDIBLE ALARM When armed: Follows *Zone Alarm Types*

[3]	*Generate tamper if detected on bypassed zone*	☐ **Yes**	☐ No
[4]	*EOL (end-of-line) resistors*	☐ **No EOL**	☐ Use EOL Resistors
[5]	*Future use*	☐ N/A	☐ N/A
[6]	*Report zone restore*	☐ **On Bell Cut-off**	☐ On Zone Closure
[7]&[8]	**Wireless Transmitter Supervision Options**	☐ see table ☐ see table	☐ see table ☐ see table

[7]	[8]	
OFF	**OFF**	**Disabled** (default)
OFF	ON	When disarmed: GENERATES TROUBLE ONLY When armed: Follows *Zone Alarm Types*
ON	OFF	When disarmed: GENERATES SILENT ALARM When armed: Follows *Zone Alarm Types*
ON	ON	When disarmed: GENERATES AUDIBLE ALARM When armed: Follows *Zone Alarm Types*

Bold = Default Setting

SECTION [133]: Partition 1 Options

Option		OFF	ON
[1]	*Auto-arm on time*	☐ **Disabled**	☐ Enabled
[2]	*Auto-arm on no movement*	☐ **Disabled**	☐ Enabled
[3]	*Auto Arming = Regular or Stay*	☐ **Regular Arming**	☐ Stay Arming
[4]	*Switch to Stay Arming if no entry delay is opened*	☐ **Disabled**	☐ Enabled
[5]	*Stay Arming with Delay Partition 1 (Delay = [070])*	☐ **Disabled**	☐ Enabled
[6] to [8]	*Future use*	☐ N/A	☐ N/A

SECTION [134]: Partition 2 Options

Option		OFF	ON
[1]	*Auto-arm on time*	☐ **Disabled**	☐ Enabled
[2]	*Auto-arm on no movement*	☐ **Disabled**	☐ Enabled
[3]	*Auto Arming = Regular or Stay*	☐ **Regular Arming**	☐ Stay Arming
[4]	*Switch to Stay Arming if no entry delay is opened*	☐ **Disabled**	☐ Enabled
[5]	*Stay Arming with Delay Partition 2 (Delay = [070])*	☐ **Disabled**	☐ Enabled
[6] to [8]	*Future use*	☐ N/A	☐ N/A

SECTION [135]: Dialer Options

Option		OFF	ON
[1] & [2]		☐ see table ☐ see table	☐ see table ☐ see table
[3]	*Reporting (Dialer)*	☐ **Disabled**	☐ Enabled
[4]	*Dialing method*	☐ Pulse Dialing	☐ **Tone (DTMF) Dialing**
[5]	*Pulse ratio*	☐ 1:2	☐ **1:1.5**
[6]	*If armed, activate bell output on Com. Failure*	☐ **Disabled**	☐ Enabled
[7] & [8]	*Future use*	☐ N/A	☐ N/A

Telephone Line Monitoring (TLM) Options

[1]	[2]	
OFF	**OFF**	**TLM Disabled** (default)
OFF	ON	TLM generates a trouble if armed
ON	OFF	TLM generates an audible alarm if armed
ON	ON	Silent alarms become audible

SECTION [136]: Dialer Options

Option		OFF	ON
[1]	*Call back WinLoad*	☐ **Disabled**	☐ Enabled
[2]	*Automatic event buffer transmission*	☐ **Disabled**	☐ Enabled
[3]	*Contact I.D. report codes*	☐ Programmable	☐ **All Codes (automatic)**
[4]	*Alternate dial*	☐ **Disabled**	☐ Enabled
[5]	*If no dial tone is present*	☐ **Continue after 4 sec.**	☐ Hang-up after 16 sec.
[6]&[7]		☐ see table ☐ see table	☐ see table ☐ see table
[8]	*Future use*	☐ N/A	☐ N/A

Pager Reporting Format Dialer Options

[6]	[7]	
OFF	**OFF**	**1 call to pager or cellular telephone** (default)
OFF	ON	2 calls to pager or cellular telephone
ON	OFF	3 calls to pager or cellular telephone
ON	ON	4 calls to pager or cellular telephone

Bold = Default Setting

SECTION [137]: Event Call Direction

Option		OFF	ON
[1]	*Call Telephone #1 for Arming/Disarming Report Codes*	☐ Disabled	☐ **Enabled**
[2]	*Call Telephone #2 for Arming/Disarming Report Codes*	☐ **Disabled**	☐ Enabled
[3]	*Call Telephone #1 for Alarm/Restore Report Codes*	☐ Disabled	☐ **Enabled**
[4]	*Call Telephone #2 for Alarm/Restore Report Codes*	☐ **Disabled**	☐ Enabled
[5]	*Call Telephone #1 for Tamper/Restore Report Codes*	☐ Disabled	☐ **Enabled**
[6]	*Call Telephone #2 for Tamper/Restore Report Codes*	☐ **Disabled**	☐ Enabled
[7] & [8]	*Future use*	☐ N/A	☐ N/A

SECTION [138]: Event Call Direction

Option		OFF	ON
[1]	*Call Telephone #1 for Trouble/Restore Report Codes*	☐ Disabled	☐ **Enabled**
[2]	*Call Telephone #2 for Trouble/Restore Report Codes*	☐ **Disabled**	☐ Enabled
[3]	*Call Telephone #1 for Special Report Codes*	☐ Disabled	☐ **Enabled**
[4]	*Call Telephone #2 for Special Report Codes*	☐ **Disabled**	☐ Enabled
[5] to [8]	*Future use*	☐ N/A	☐ N/A

COMMUNICATION SETTINGS

Section #

[140] ___ / ___
TEL1 TEL2

REPORTING FORMATS
1 = ADEMCO SLOW (1400HZ, 1900HZ, 10BPS)
2 = SILENT KNIGHT FAST (1400HZ, 1900HZ, 20BPS)
3 = SESCOA (2300HZ, 1800HZ, 20BPS)
4 = ADEMCO EXPRESS (DTMF 4+2)
5 = ADEMCO CONTACT ID (DEFAULT) ALSO, SEE OPTION [3] IN SECTION [136]
6 = PAGER FORMAT

If Hexadecimals (0 to FF) are used to program the report codes, verify that the pager also supports Hexadecimals. If the pager does not support Hexadecimals, use only the digits 0 to 9.

[141] ___/___/___/___ PANEL IDENTIFIER (WINLOAD SOFTWARE)
[142] ___/___/___/___ PC PASSWORD (WINLOAD SOFTWARE)
[143] ___/___/___/___ PARTITION ACCOUNT NUMBER 1 (For less than 4 digits, use the **[FORCE]** key to enter blanks.)
[144] ___/___/___/___ PARTITION ACCOUNT NUMBER 2 (For less than 4 digits, use the **[FORCE]** key to enter blanks.)

[150] __/__
PC TELEPHONE NUMBER FOR WINLOAD SOFTWARE (32-digits, if less than 32 press [ENTER] to accept)

[151] __/__
CENTRAL STATION TELEPHONE OR PAGER NUMBER 1 (32-digits, if less than 32 press [ENTER] to accept)

[152] __/__
CENTRAL STATION TELEPHONE OR PAGER NUMBER 2 (32-digits, if less than 32 press [ENTER] to accept)

[153] __/__
BACK UP TELEPHONE NUMBER (32-digits, if less than 32 press [ENTER] to accept)

Special Keys for Telephone Numbers		
[STAY] = *	**[MEM]** = Switch from pulse to tone dialing or vice versa	**[FORCE]** = Delete current digit
[BYP] = #	**[TBL]** or **[TRBL]** = 4-second pause	**[PG]** or **[FNC1]** = Inserts Blank Space

REPORT CODES

Ademco Slow, **Silent Knight**, **SESCOA**, **Ademco Express** and **Pager Formats**: Enter the desired 1- or 2-digit hexa-value (0-F or 00-FF). **Ademco "Programmable" Format**: Enter the desired 2-digit hexa values from the "Ademco Report Code List - Programmable" (see Appendix A on page 30). Also Note that entering FF will set the report code to the default Ademco Report Code. **Ademco "All Codes" Format**: The control panel automatically generates report codes from the "Ademco Report Code List - All Codes" (see Appendix B on page 31).

ARMING REPORT CODES

[160]___/___Access Code 01
___/___Access Code 02
___/___Access Code 03
___/___Access Code 04

[161]___/___Access Code 05
___/___Access Code 06
___/___Access Code 07
___/___Access Code 08

[162]___/___Access Code 09
___/___Access Code 10
___/___Access Code 11
___/___Access Code 12

[163]___/___Access Code 13
___/___Access Code 14
___/___Access Code 15
___/___Access Code 16

[164]___/___Access Code 17
___/___Access Code 18
___/___Access Code 19
___/___Access Code 20

[165]___/___Access Code 21
___/___Access Code 22
___/___Access Code 23
___/___Access Code 24

[166]___/___Access Code 25
___/___Access Code 26
___/___Access Code 27
___/___Access Code 28

[167]___/___Access Code 29
___/___Access Code 30
___/___Access Code 31
___/___Access Code 32

[168]___/___Access Code 33
___/___Access Code 34
___/___Access Code 35
___/___Access Code 36

[169]___/___Access Code 37
___/___Access Code 38
___/___Access Code 39
___/___Access Code 40

[170]___/___Access Code 41
___/___Access Code 42
___/___Access Code 43
___/___Access Code 44

[171]___/___Access Code 45
___/___Access Code 46
___/___Access Code 47
___/___Access Code 48

SPECIAL ARMING CODES

[172]___/___Auto-Arming
___/___Late to Close
___/___No Movement
___/___Partial Arming

[173]___/___Quick Arming
___/___Arming via PC
___/___Keyswitch Arming
___/___N/A

DISARMING REPORT CODES

[174]___/___Access Code 01
___/___Access Code 02
___/___Access Code 03
___/___Access Code 04

[175]___/___Access Code 05
___/___Access Code 06
___/___Access Code 07
___/___Access Code 08

[176]___/___Access Code 09
___/___Access Code 10
___/___Access Code 11
___/___Access Code 12

[177]___/___Access Code 13
___/___Access Code 14
___/___Access Code 15
___/___Access Code 16

[178]___/___Access Code 17
___/___Access Code 18
___/___Access Code 19
___/___Access Code 20

[179]___/___Access Code 21
___/___Access Code 22
___/___Access Code 23
___/___Access Code 24

[180]___/___Access Code 25
___/___Access Code 26
___/___Access Code 27
___/___Access Code 28

[181]___/___Access Code 29
___/___Access Code 30
___/___Access Code 31
___/___Access Code 32

[182]___/___Access Code 33
___/___Access Code 34
___/___Access Code 35
___/___Access Code 36

[183]___/___Access Code 37
___/___Access Code 38
___/___Access Code 39
___/___Access Code 40

[184]___/___Access Code 41
___/___Access Code 42
___/___Access Code 43
___/___Access Code 44

[185]___/___Access Code 45
___/___Access Code 46
___/___Access Code 47
___/___Access Code 48

SPECIAL DISARMING CODES

[186]___/___Cancel Auto-Arm
___/___Disarming via PC
___/___Keyswitch Disarm
___/___N/A

ALARM REPORT CODES

ALARM	RESTORE	SPECIAL
[187]___/___Zone 01	**[191]**___/___Zone 01	**[195]**___/___Emergency Panic
___/___Zone 02	___/___Zone 02	___/___Auxiliary Panic
___/___Zone 03	___/___Zone 03	___/___Fire Panic
___/___Zone 04	___/___Zone 04	___/___Recent Closing
[188]___/___Zone 05	**[192]**___/___Zone 05	**[196]**___/___Zone Shutdown
___/___Zone 06	___/___Zone 06	___/___Duress
___/___Zone 07	___/___Zone 07	___/___Keypad Lockout
___/___Zone 08	___/___Zone 08	___/___N/A
[189]___/___Zone 09	**[193]**___/___Zone 09	
___/___Zone 10	___/___Zone 10	
___/___Zone 11	___/___Zone 11	
___/___Zone 12	___/___Zone 12	
[190]___/___Zone 13	**[194]**___/___Zone 13	
___/___Zone 14	___/___Zone 14	
___/___Zone 15	___/___Zone 15	
___/___N/A	___/___N/A	

TAMPER REPORT CODES

TROUBLE		
[197]___/___Zone 01	**[200]**___/___Zone 13	**[203]**___/___Zone 09
___/___Zone 02	___/___Zone 14	___/___Zone 10
___/___Zone 03	___/___Zone 15	___/___Zone 11
___/___Zone 04	___/___N/A	___/___Zone 12
	RESTORE	
[198]___/___Zone 05	**[201]**___/___Zone 01	**[204]**___/___Zone 13
___/___Zone 06	___/___Zone 02	___/___Zone 14
___/___Zone 07	___/___Zone 03	___/___Zone 15
___/___Zone 08	___/___Zone 04	___/___N/A
[199]___/___Zone 09	**[202]**___/___Zone 05	
___/___Zone 10	___/___Zone 06	
___/___Zone 11	___/___Zone 07	
___/___Zone 12	___/___Zone 08	

SYSTEM TROUBLE REPORT CODES

SYSTEM TROUBLE	RESTORE	SPECIAL
[205]___/___N/A	**[208]**___/___TLM	**[211]**___/___Cold Start (Shutdown)
___/___AC Failure	___/___AC Failure	___/___Test Report
___/___Battery Failure	___/___Battery Failure	___/___N/A
___/___Auxiliary Supply	___/___Auxiliary Supply	___/___PC Exit
[206]___/___Bell Output Overload	**[209]**___/___Bell Output Overload	**[212]**___/___Installer In
___/___Bell Output Disconnect	___/___Bell Output Disconnect	___/___Installer Out
___/___Timer Loss	___/___Timer Loss	___/___N/A
___/___Fire Loop Trouble	___/___Fire Loop Trouble	___/___N/A
[207]___/___Wireless Low Battery	**[210]**___/___Wireless Low Battery	**[213]**___/___TX Supervision Loss
___/___Module Fault	___/___Module Fault	___/___TX Supervision Restore
___/___Printer Fault	___/___Printer Fault	___/___N/A
___/___Fail to Communicate	___/___Fail to Communicate	___/___N/A

SYSTEM SETTINGS

Section #		Description
[280]	___/___:___/___	SYSTEM REAL TIME CLOCK (HH:MM)
[281]	___/___/___/___/___/___	INSTALLER CODE, **DEFAULT: 000000**
[282]	___/___/___	INSTALLER CODE LOCK, **DEFAULT: 000** (147 TO LOCK, 000 TO UNLOCK)
[301]	___/___/___/___/___/___	SYSTEM MASTER CODE, **DEFAULT: 123456**

USER CODE OPTIONS

System Master Code arms or disarm partitions using any arming method and can create, modify or delete any *User Access Code.* Only the System Master Code can modify or delete User Access Codes assigned to both partitions.

Master Code 1 is permanently assigned to partition 1 and can be used to create, modify or delete *User Access Codes* that are assigned to partition 1.

Master Code 2 is permanently assigned to partition 2 (except when partitioning is disabled, *Master Code 2* will be assigned to partition 1) and can be used to create, modify or delete *User Access Codes* that are assigned to the same partition.

Default for all user codes is options **[1]**, **[3]** and **[4]** ON.
ON = Option Enabled
OFF = Option Disabled

[1] ON = Partition 1 Access	**[5]** ON = Force Arming
[2] ON = Partition 2 Access	**[6]** ON = Arm Only
[3] ON = Bypass Programming	**[7]** ON = PGM Activation Only
[4] ON = Stay Arming	**[8]** ON = Future Use

Section #		User Code Options (ON/OFF)							
[302]	Master Code 1	1	2	3	4	5	6	7	8
[303]	Master Code 2	1	2	3	4	5	6	7	8
[304]	User Code 004	1	2	3	4	5	6	7	8
[305]	User Code 005	1	2	3	4	5	6	7	8
[306]	User Code 006	1	2	3	4	5	6	7	8
[307]	User Code 007	1	2	3	4	5	6	7	8
[308]	User Code 008	1	2	3	4	5	6	7	8
[309]	User Code 009	1	2	3	4	5	6	7	8
[310]	User Code 010	1	2	3	4	5	6	7	8
[311]	User Code 011	1	2	3	4	5	6	7	8
[312]	User Code 012	1	2	3	4	5	6	7	8
[313]	User Code 013	1	2	3	4	5	6	7	8
[314]	User Code 014	1	2	3	4	5	6	7	8
[315]	User Code 015	1	2	3	4	5	6	7	8
[316]	User Code 016	1	2	3	4	5	6	7	8
[317]	User Code 017	1	2	3	4	5	6	7	8
[318]	User Code 018	1	2	3	4	5	6	7	8
[319]	User Code 019	1	2	3	4	5	6	7	8
[320]	User Code 020	1	2	3	4	5	6	7	8
[321]	User Code 021	1	2	3	4	5	6	7	8
[322]	User Code 022	1	2	3	4	5	6	7	8
[323]	User Code 023	1	2	3	4	5	6	7	8
[324]	User Code 024	1	2	3	4	5	6	7	8

Section		User Code Options (ON/OFF)							
[325]	User Code 025	1	2	3	4	5	6	7	8
[326]	User Code 026	1	2	3	4	5	6	7	8
[327]	User Code 027	1	2	3	4	5	6	7	8
[328]	User Code 028	1	2	3	4	5	6	7	8
[329]	User Code 029	1	2	3	4	5	6	7	8
[330]	User Code 030	1	2	3	4	5	6	7	8
[331]	User Code 031	1	2	3	4	5	6	7	8
[332]	User Code 032	1	2	3	4	5	6	7	8
[333]	User Code 033	1	2	3	4	5	6	7	8
[334]	User Code 034	1	2	3	4	5	6	7	8
[335]	User Code 035	1	2	3	4	5	6	7	8
[336]	User Code 036	1	2	3	4	5	6	7	8
[337]	User Code 037	1	2	3	4	5	6	7	8
[338]	User Code 038	1	2	3	4	5	6	7	8
[339]	User Code 039	1	2	3	4	5	6	7	8
[340]	User Code 040	1	2	3	4	5	6	7	8
[341]	User Code 041	1	2	3	4	5	6	7	8
[342]	User Code 042	1	2	3	4	5	6	7	8
[343]	User Code 043	1	2	3	4	5	6	7	8
[344]	User Code 044	1	2	3	4	5	6	7	8
[345]	User Code 045	1	2	3	4	5	6	7	8
[346]	User Code 046	1	2	3	4	5	6	7	8
[347]	User Code 047	1	2	3	4	5	6	7	8
[348]	User Code 048	1	2	3	4	5	6	7	8

REPROGRAM ALL MODULES

[750] After removing an expansion module from the communication bus, the control panel keeps the module's programmed sections in memory. Therefore, if you add or replace a module you can re-program the module with the settings saved in the control panel. To do so, enter section **[750]** and press **[ENTER]**. The keypads will beep twice every second until the procedure is completed.

PARADOX MEMORY KEY (PMC-3)

[900] DOWNLOAD FROM PARADOX MEMORY KEY TO DESTINATION CONTROL PANEL.

[902] COPY TO MEMORY KEY FROM SOURCE CONTROL PANEL.

Download to DESTINATION Control Panel

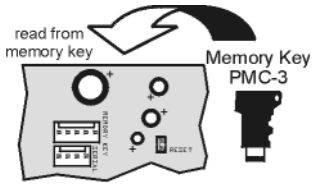

1) Remove AC and battery power from the control panel.
2) Insert the Memory Key onto the serial connector labelled KEY on the Spectra control panel to which you wish to download the contents of the memory key to.
3) Re-apply AC and battery power.
4) Enter installer programming mode, enter section **[900]**, then press **[ENTER]** to acknowledge.
5) When the keypad emits a "confirmation beep", remove the *Memory Key*.
6) Enter section **[750]** to reprogram the modules with the information downloaded from the Paradox Memory Key.

Copy to Memory Key from SOURCE Control Panel

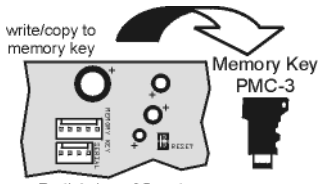

1) Remove AC and battery power from the control panel.
2) Insert Memory Key onto the serial connector labelled KEY on the Spectra control panel that you want to copy. Make sure the write protect jumper of the Memory Key is on.
3) Re-apply AC and battery power.
4) Enter installer programming mode, enter section **[902]**, then press **[ENTER]** to acknowledge.
5) When the keypad emits a Confirmation Beep, remove the Memory Key. Remove the *Memory Key*'s jumper if you do not wish to accidentally overwrite its contents.

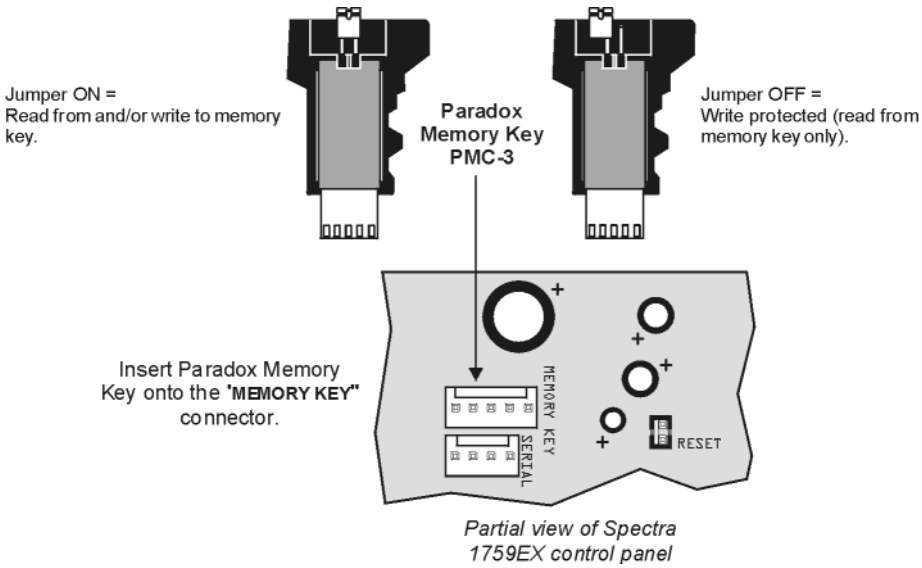

4-PGM OUTPUT MODULES V2.0

Due to the APR3-PGM4's Auto-recognition feature, it can be used with either the Spectra (V2.0 or higher), Digiplex or DigiplexNE control panel. When connected to the bus, the APR3-PGM4 automatically detects which control panel it is connected to and adjusts its internal communication parameters to function accordingly. Only one APR3-PGM4 can be connected to each Spectra control panel.

Modules with the APR- prefix are compatible with Spectra (versions 2.0 and higher) and Digiplex. Modules with the APR3- prefix are compatible with Spectra (versions 2.0 and higher), Digiplex and DigiplexNE.

Bold = Default Setting

SECTION [500]: GENERAL OPTIONS

Option		OFF	ON
[1]	*PGM1 Time Base Selection*	☐ **Seconds**	☐ Minutes
[2]	*PGM2 Time Base Selection*	☐ **Seconds**	☐ Minutes
[3]	*PGM3 Time Base Selection*	☐ **Seconds**	☐ Minutes
[4]	*PGM4 Time Base Selection*	☐ **Seconds**	☐ Minutes
[5]	*Future use*	☐ N/A	☐ N/A
[6]	*Future use*	☐ N/A	☐ N/A
[7]	*Future use*	☐ N/A	☐ N/A
[8]	*Future use*	☐ N/A	☐ N/A

PGM PROGRAMMING

Each PGM Deactivation event can be used as another activation event if their respective PGM timer (see sections [501] to [504]) is programmed with a value other than 000. The APR3-PGM4 uses the same PGM events as the Spectra control panel, please refer to "Programmable Outputs" on page 9.

Section #	Decimal Value (000-255)	Description	Default Value
[501] ___/___/___	(000 = follow deactivation event)	PGM1 TIMER	*5 sec.*
[502] ___/___/___	(000 = follow deactivation event)	PGM2 TIMER	*5 sec.*
[503] ___/___/___	(000 = follow deactivation event)	PGM3 TIMER	*5 sec.*
[504] ___/___/___	(000 = follow deactivation event)	PGM4 TIMER	*5 sec.*

Section #	Event Group #	Sub-Group #	Partition #
[505] PGM1 Activation Event	___/___	___/___	___/___
[506] PGM1 Deactivation Event	___/___	___/___	___/___
[507] PGM2 Activation Event	___/___	___/___	___/___
[508] PGM2 Deactivation Event	___/___	___/___	___/___
[509] PGM3 Activation Event	___/___	___/___	___/___
[510] PGM3 Deactivation Event	___/___	___/___	___/___
[511] PGM4 Activation Event	___/___	___/___	___/___
[512] PGM4 Deactivation Event	___/___	___/___	___/___

PRINTER MODULE V2.0

Due to the APR3-PRT1's Auto-recognition feature, it can be used with either the Spectra (V2.0 or higher), Digiplex or DigiplexNE control panel. When connected to the bus, the APR3-PRT1 automatically detects which control panel it is connected to and adjusts its internal communication parameters to function accordingly. Only one APR3-PRT1 can be connected to each Spectra control panel.

Modules with the APR- prefix are compatible with Spectra (versions 2.0 and higher) and Digiplex. Modules with the APR3- prefix are compatible with Spectra (versions 2.0 and higher), Digiplex and DigiplexNE.

Bold = Default Setting

SECTION [550]: GENERAL OPTIONS

Option		OFF	ON
[1]	*Assigned to Partition 1*	☐ **Disabled**	☐ Enabled
[2]	*Assigned to Partition 2*	☐ **Disabled**	☐ Enabled
[3]	*PGM normal state*	☐ **Normally Open (N.O.)**	☐ Normally Closed (N.C.)
[4]	*Print Arming and disarming events*	☐ **Disabled**	☐ Automatically
[5]	*Print Alarm and Alarm Restore events*	☐ **Disabled**	☐ Automatically
[6]	*Print Tamper and Tamper Restore events*	☐ **Disabled**	☐ Automatically
[7]	*Print Trouble and Trouble Restore events*	☐ **Disabled**	☐ Automatically
[8]	*Print Special events*	☐ **Disabled**	☐ Automatically

SECTION [551]: AUTOMATIC ZONE STATUS PRINTING

Option		OFF	ON
[1]	*Print status of Zone 1*	☐ **Disabled**	☐ Automatically
[2]	*Print status of Zone 2*	☐ **Disabled**	☐ Automatically
[3]	*Print status of Zone 3*	☐ **Disabled**	☐ Automatically
[4]	*Print status of Zone 4*	☐ **Disabled**	☐ Automatically
[5]	*Print status of Zone 5*	☐ **Disabled**	☐ Automatically
[6]	*Print status of Zone 6*	☐ **Disabled**	☐ Automatically
[7]	*Print status of Zone 7*	☐ **Disabled**	☐ Automatically
[8]	*Print status of Zone 8*	☐ **Disabled**	☐ Automatically

SECTION [552]: AUTOMATIC ZONE STATUS PRINTING

Option		OFF	ON
[1]	*Print status of Zone 9*	☐ **Disabled**	☐ Automatically
[2]	*Print status of Zone 10*	☐ **Disabled**	☐ Automatically
[3]	*Print status of Zone 11*	☐ **Disabled**	☐ Automatically
[4]	*Print status of Zone 12*	☐ **Disabled**	☐ Automatically
[5]	*Print status of Zone 13*	☐ **Disabled**	☐ Automatically
[6]	*Print status of Zone 14*	☐ **Disabled**	☐ Automatically
[7]	*Print status of Zone 15*	☐ **Disabled**	☐ Automatically
[8]	*N/A*	☐ N/A	☐ N/A

Bold = Default Setting

SECTION [553]: SERIAL AND PARALLEL PORT SETUP OPTIONS

Option		OFF	ON
[1]	*Serial port*	☐ **Disabled**	☐ Enabled
[2]&[3]		☐ see table ☐ see table	☐ see table ☐ see table

Baud Rate Settings

[2]	[3]	APR-PRT1	APR3-PRT1
OFF	**OFF**	**1200 baud** (default)	**2400 baud** (default)
ON	OFF	2400 baud	9600 baud
OFF	ON	9600 baud	19200 baud
ON	ON	19200 baud	57600 baud

[4]	*Parallel port*	☐ **Disabled**	☐ Enabled
[5]	*Off-line status ignored (parallel port only)*	☐ **Disabled**	☐ Enabled
[6]	*Paper empty status ignored (parallel port only)*	☐ **Disabled**	☐ Enabled
[7]	*Printer fault status ignored (parallel port only)*	☐ **Disabled**	☐ Enabled
[8]	*Printer busy status ignored (parallel port only)*	☐ **Disabled**	☐ Enabled

PGM PROGRAMMING

The PGM Deactivation event can be used as another activation event if the PGM Timer (section [554]) is programmed with a value other than 000. The APR3-PRT1 module uses the same PGM events as the Spectra control panel, please refer to “Programmable Outputs” on page 9

Section #	Decimal Value (000-255)	Description	Default Value
[554] ___/___/___	seconds (000 = follow deactivation event)	PGM1 TIMER	*5 sec.*

Section #	Event Group #	Sub-Group #	Partition #
[555] PGM1 Activation Event	___/___	___/___	___/___
[556] PGM1 Deactivation Event	___/___	___/___	___/___

CLOCK PROGRAMMING

For example, to enter the date March 26, 2000 you would enter 20 (century), 00 (year), 03 (month), and 26 (day).

Section #	Value
[557]	Year ___/___/___/___ Month ___/___ Day ___/___

VOICE-ASSISTED ARM/DISARM BUS MODULE V2.0

Due to InTouch's Auto-recognition feature, it can be used with either the Spectra (V2.0 or higher), Digiplex or DigiplexNE control panel. When connected to the bus, InTouch automatically detects which control panel it is connected to and adjusts its internal communication parameters to function accordingly. Only one InTouch can be connected to each Spectra control panel.

APR3-ADM2 can also be programmed using the WinLoad Software. Refer to the *WinLoad Online Help* for more information.

Modules with the APR- prefix are compatible with Spectra (versions 2.0 and higher) and Digiplex. Modules with the APR3- prefix are compatible with Spectra (versions 2.0 and higher), Digiplex and DigiplexNE.

Section #	Decimal Value (000-255)	Description	Default Value
[575] ___/___/___	rings (000 = disabled)	NUMBER OF RINGS	*8 rings*
[576] ___/___/___	seconds (010-255, 000 = disabled)	ANSWERING MACHINE OVERRIDE	*000*
[577] ___/___/___	seconds/minutes (000 = disabled)	PGM TIMER	*005*

Bold = Default Setting

SECTION [578]: GENERAL OPTIONS

Option		OFF	ON
[1]	*Stand-alone Code length*	☐ **6-digits**	☐ 4-digits
[2]	*Partitioned system*	☐ **Disabled**	☐ Enabled
[3]	*PGM output*	☐ **Disabled**	☐ Enabled
[4]	*PGM time in*	☐ **Seconds**	☐ Minutes
[5]	*Future use*	☐ N/A	☐ N/A
[6]	*Future use*	☐ N/A	☐ N/A
[7]	*Future use*	☐ N/A	☐ N/A
[8]	*Future use*	☐ N/A	☐ N/A

ZONE ASSIGNMENT

The serial number can be located on the inside of the transmitter or you can use the *Serial Number Display* feature (see page 24). *Also, refer to "Zone Recognition Table" on page 6.*

Section # Serial #

[601] ___/___/___/___/___/___= EXPANSION INPUT 1

[602] ___/___/___/___/___/___= EXPANSION INPUT 2

[603] ___/___/___/___/___/___= EXPANSION INPUT 3

[604] ___/___/___/___/___/___= EXPANSION INPUT 4

[605] ___/___/___/___/___/___= EXPANSION INPUT 5

[606] ___/___/___/___/___/___= EXPANSION INPUT 6

[607] ___/___/___/___/___/___= EXPANSION INPUT 7

[608] ___/___/___/___/___/___= EXPANSION INPUT 8

Bold = Default Setting

SECTION [610]: GENERAL OPTIONS

Option		OFF	ON
[1]	*Wireless transmitter check-in supervision*	☐ **Disabled**	☐ Enabled
[2]	*Check-in supervision base time setting (must be same as the transmitter's jumper setting)*	☐ **Hours**	☐ Minutes
[3] & **[4]**	*Future use*	☐ N/A	☐ N/A
[5]	*Check-in supervision time value (must be same as the transmitter's jumper setting)*	☐ **12**	☐ 6
[6]	*Future use*	☐ N/A	☐ N/A
[7]	*Future use*	☐ N/A	☐ N/A
[8]	*Remote control assignment mode*	☐ **Omnia (OMN-RCT1)**	☐ ParaKey (LIB-344)

SERIAL NUMBER DISPLAY

Section # Description

[630] Press the tamper switch of the Omnia Wireless Transmitter. The keypad will emit a confirmation beep. On LED keypads, press the [ENTER] key to view the digits one at a time. On LCD keypads, the first 3 digits of the serial number will appear. Press the [ENTER] key 3 times to view the next 3 digits. Continue activating the desired transmitters or press [CLEAR] to exit.

SIGNAL STRENGTH DISPLAY

Section # Description

After entering the desired section, activate the Omnia Wireless Transmitter by opening/closing the zone or by pressing the tamper switch. Always ignore the first reading as it won't be accurate. An average reading of 3 and up is acceptable.

[631] Display Signal Strength of Expansion Input 1 - Section [601]
[632] Display Signal Strength of Expansion Input 2 - Section [602]
[633] Display Signal Strength of Expansion Input 3 - Section [603]
[634] Display Signal Strength of Expansion Input 4 - Section [604]
[635] Display Signal Strength of Expansion Input 5 - Section [605]
[636] Display Signal Strength of Expansion Input 6 - Section [606]
[637] Display Signal Strength of Expansion Input 7 - Section [607]
[638] Display Signal Strength of Expansion Input 8 - Section [608]

REMOTE CONTROL USER ASSIGNMENT

Section #	Decimal Value	Description	Default Value
[701]	___/___/___(001-048 = user #)	remote control #1 - section [731]*	*000*
[702]	___/___/___(001-048 = user #)	remote control #2 - section [732]*	*000*
[703]	___/___/___(001-048 = user #)	remote control #3 - section [733]*	*000*
[704]	___/___/___(001-048 = user #)	remote control #4 - section [734]*	*000*
[705]	___/___/___(001-048 = user #)	remote control #5 - section [735]*	*000*
[706]	___/___/___(001-048 = user #)	remote control #6 - section [736]*	*000*
[707]	___/___/___(001-048 = user #)	remote control #7 - section [737]*	*000*
[708]	___/___/___(001-048 = user #)	remote control #8 - section [738]*	*000*

* refer to *“Remote Control Assignment” on page 26*.

BUTTON OPTIONS

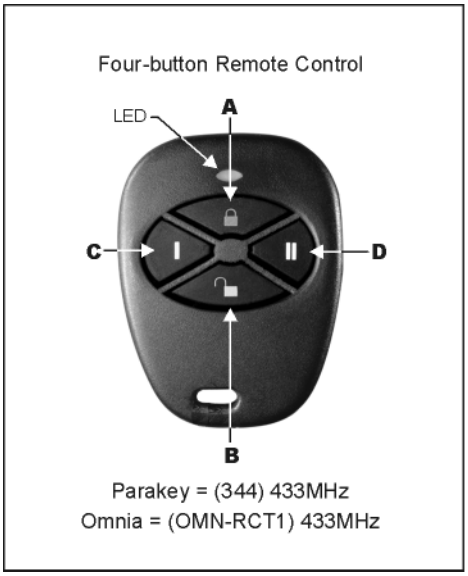

Button Options Table

Empty Slot [FORCE] - Button disabled
1 - Regular Arming
2 - Stay Arming
3 - Instant Arming
4 - Force Arming
5 - Disarm
6 - Disarm when no alarm
7 - Regular Arm and Disarm
8 - Panic 1
9 - Panic 2
A - Panic 3
B - PGM Activation *(Event Group #7, see PGM Programming)*
C - PGM Activation *(Event Group #8, see PGM Programming)*
D - PGM Activation *(Event Group #9, see PGM Programming)*

Section # Hexa Value: Each digit is a value from 1 to D (see Button Options Table)

[711] ____/____/____/____/____/____/____/____ remote control #1
A B C D A+B C+D A+C B+D

[712] ____/____/____/____/____/____/____/____ remote control #2
A B C D A+B C+D A+C B+D

[713] ____/____/____/____/____/____/____/____ remote control #3
A B C D A+B C+D A+C B+D

[714] ____/____/____/____/____/____/____/____ remote control #4
A B C D A+B C+D A+C B+D

[715] ____/____/____/____/____/____/____/____ remote control #5
A B C D A+B C+D A+C B+D

[716] ____/____/____/____/____/____/____/____ remote control #6
A B C D A+B C+D A+C B+D

[717] ____/____/____/____/____/____/____/____ remote control #7
A B C D A+B C+D A+C B+D

[718] ____/____/____/____/____/____/____/____ remote control #8
A B C D A+B C+D A+C B+D

Please note that the User Code assigned to the remote control (sections [701] to [708]) must have the same User Options and Button Options enabled. For example, if you enable the Force Arming button option you must enable the appropriate Force Arming user option. Also, if you enable any of the Panic button options, you must enable the Panic options in the control panel.

REMOTE CONTROL ASSIGNMENT

Enter the appropriate section and press any button on the remote control twice to assign the remote control. If you hear a rejection beep, an error has occurred or the remote control has already been assigned. To delete a remote control, enter the desired section and then press the [FORCE] button.

Section #	
[731]	REMOTE CONTROL #1
[732]	REMOTE CONTROL #2
[733]	REMOTE CONTROL #3
[734]	REMOTE CONTROL #4
[735]	REMOTE CONTROL #5
[736]	REMOTE CONTROL #6
[737]	REMOTE CONTROL #7
[738]	REMOTE CONTROL #8

ZONE EXPANSION BUS MODULES

Only one SPC/APR3-ZX4 or one SPC/APR3-ZX8 can be connected to each Spectra control panel. The following sections are for SPC-ZX4 version 1.0, APR3-ZX4 version 1.0, SPC-ZX8 version 1.0 and APR3-ZX8 version 2.0.

Modules with the APR- prefix are compatible with Spectra (versions 2.0 and higher) and Digiplex. Modules with the APR3- prefix are compatible with Spectra (versions 2.0 and higher), Digiplex and DigiplexNE.

Bold = Default Setting

SECTION [650]: Options

Option		OFF	ON
[1]	*EOL (end-of-line) resistors for hardwire modules*	☐ **No EOL**	☐ Use EOL Resistors
[2]	*Zone Expansion Module tamper recognition*	☐ **Disabled**	☐ Z1 becomes tamper input
[3]	*PGM1 on SPC/APR3-ZX8 follows Global PGM programmed in sections [124] & [125]*	☐ **Disabled**	☐ Enabled
[4]-[8]	*Future Use*	☐ N/A	☐ N/A

SECTION [651]: ZONE ASSIGNMENT

Option	See "Zone Recognition Table" on page 6.	OFF	ON
[1]	*Input Z1 =Expansion Input 1*	☐ **Disabled**	☐ Enabled
[2]	*Input Z2 =Expansion Input 2*	☐ **Disabled**	☐ Enabled
[3]	*Input Z3 =Expansion Input 3*	☐ **Disabled**	☐ Enabled
[4]	*Input Z4 =Expansion Input 4*	☐ **Disabled**	☐ Enabled
[5]	*Input Z5 (SPC/APR3-ZX8 only) =Expansion Input 5*	☐ **Disabled**	☐ Enabled
[6]	*Input Z6 (SPC/APR3-ZX8 only) =Expansion Input 6*	☐ **Disabled**	☐ Enabled
[7]	*Input Z7 (SPC/APR3-ZX8 only) =Expansion Input 7*	☐ **Disabled**	☐ Enabled
[8]	*Input Z8 (SPC/APR3-ZX8 only) =Expansion Input 8*	☐ **Disabled**	☐ Enabled

PGM PROGRAMMING (SPC-ZX8 and APR3-ZX8 Only)

The PGM will only activate or deactivate 100mS after the selected event occurs. The PGM Deactivation event can be used as another activation event if the PGM Timer (section [655]) is programmed with a value other than 000. The system will ignore the PGM if it has been programmed to follow the Global PGM (option [3] in section [650]). Only PGM events from the table below can be used.

Section #	Decimal Value (000-255)	Description	Default Value
[655] ___/___/___	seconds (000 = follow deactivation event)	PGM1 TIMER	*5 sec.*

Section #	Event Group #	Sub-Group #	Partition #
[656] PGM1 Activation Event	___/___	___/___	___/___
[657] PGM1 Deactivation Event	___/___	___/___	___/___

Event Group #	Sub-Group #	Partition #
For SPC-ZX8: **60 = Hardwire Zone Opened** **61 = Hardwire Zone Closed** **62 = Hardwire Tamper Opened** **63 = Hardwire Tamper Closed** **For APR3-ZX8:** **60 = Hardwire Zone/Hardwire Tamper Opened** **61 = Hardwire Zone/Hardwire Tamper Closed**	01 = Expansion Input 1 - Section [651] - [1] 02 = Expansion Input 2 - Section [651] - [2] 03 = Expansion Input 3 - Section [651] - [3] 04 = Expansion Input 4 - Section [651] - [4] 05 = Expansion Input 5 - Section [651] - [5] 06 = Expansion Input 6 - Section [651] - [6] 07 = Expansion Input 7 - Section [651] - [7] 08 = Expansion Input 8 - Section [651] - [8] 99 = Any zone expansion bus module input	Not used; enter 00

PARTITIONING

The ***Spectra*** system is equipped with a partitioning feature which can divide the alarm system into two distinct areas identified as Partition 1 and Partition 2. Partitioning can be used in installations where shared security systems are more practical, such as an office/warehouse building. ***If the system is not partitioned, all User Codes and features will be recognized as belonging to Partition 1.***

How does a partitioned system work?

- Users can only arm or disarm their assigned partitions.
- Only zones assigned to Partition 1 will arm or disarm when Partition 1 is armed or disarmed.
- Only zones assigned to Partition 2 will arm or disarm when Partition 2 is armed or disarmed.
- Zones assigned to both partitions will arm when both partitions are armed and will disarm when at least one disarms.
- Some of the system's features can be programmed separately for each partition.

PROGRAMMING ACCESS CODES

User Access Codes are personal identification numbers that allow users to enter certain programming modes, arm or disarm the alarm system as well as activate or deactivate PGMs. ***Spectra*** security systems support the following:

System Master Code can arm or disarm any partition using any arming method and can create, modify or delete any *User Access Code.* Only the System Master Code can modify or delete User Access Codes assigned to both partitions.

Master Code 1 is permanently assigned to partition 1 and can be used to create, modify or delete *User Access Codes* that are assigned to partition 1.

Master Code 2 is permanently assigned to partition 2 (except when partitioning is disabled, *Master Code 2* will be assigned to partition 1) and can be used to create, modify or delete *User Access Codes* that are assigned to the same partition.

45 *User Access Codes* (including 1 Duress code)

How Do I Program Access Codes?

1) Press **[ENTER]**
2) Key in the **[SYSTEM MASTER CODE]** or **[MASTER CODE]**
3) Key in 3-digit **[SECTION]** (see User Code Table)
4) Key in new 4- or 6-digit **[ACCESS CODE]**
   [ENTER] flashes. Return to step 3

How Do I Delete Access Codes?

1) Repeat steps 1 to 3 (see above)
2) Press the **[FORCE]** key once for each digit in the access code (4 or 6 times) until the keypad emits a Confirmation Beep.

User Code Table

Section	User Codes
[001]	User Code 001 = System Master Code
[002]	User Code 002 = Master Code 1
[003]	User Code 003 = Master Code 2
[004] TO [047]	User Code 004 to User Code 047
[048]	User Code 048 or Duress Code

PROGRAMMING CHIME ZONES

This feature allows users to program which zones will be *Chime Enabled*. A *Chime Enabled* zone will cause the keypad to emit a rapid intermittent beep tone (BEEP-BEEP-BEEP-BEEP) advising the user every time it is opened. Each keypad must be Chime Programmed separately. Keypad chimes must be re-programmed if the system suffers a total power loss (16-zone LED and LCD Keypads only).

10-ZONE LED KEYPAD:

Press and hold any key from **[1]** to **[10]** for 3 seconds to activate or deactivate Chiming for zones 1 to 10. For example, press and hold the [1] key to enable chiming on zone 1. If, after pressing and holding a key, the keypad emits a confirmation beep, this means the chime feature has been enabled for that zone. If the keypad emits a Rejection Beep, this means the Chime feature has been disabled for the corresponding zone.

16-ZONE LED KEYPAD:

Press and hold the **[9]** key. Enter the 2-digit (**01 to 16**) zone number(s). When the corresponding LED is on, the zone is chimed. When the corresponding LED is off, the zone is unchimed. When the desired zones are chimed, press **[ENTER]**.

LCD KEYPAD:

Press and hold the **[9]** key. Enter the 2-digit (**01 to 16**) zone number(s) or use the arrow keys to scroll through the zones. When the appropriate zone is displayed, press the **[FNC1]** key. When the desired zones are chimed, press **[ENTER]**.

KEYPAD MUTING

Press and hold the **[CLEAR]** key for 3 seconds to enable or disable keypad muting. When muted, the keypad will only beep when a key is pressed or when the keypad emits a Rejection or Confirmation Beep. All other beep functions are disabled.

KEYPAD BACKLIGHT (1686H and 1686V Only)

The illumination level behind the keys can be modified to suit the user's needs. There are four backlight levels. The **[MEM]** key is used to set the desired level. Each consecutive push of the **[MEM]** key will incease the backlight level until the maximum level is reached. After reaching the maximum level, the backlight level will return to the lowest level and the whole process is repeated. To change the backlight level:

How do I Modify The Backlight?

1) Press and hold the **[MEM]** key for 3 seconds
2) The **[MEM]** key will illuminate
3) Press the **[MEM]** key to set the desired backlight level
4) Press **[CLEAR]** or **[ENTER]** to exit

QUICK FUNCTION KEYS

INSTALLER TEST MODE

[ENTER] + **[INSTALLER CODE]** + **[TBL]** or **[TRBL]**

The Installer Test Mode allows you to perform walk tests where the bell/siren will squawk once to indicate an open zone and twice to indicate a closed zone. To enter this mode, press **[ENTER]** + **[INSTALLER CODE]** + **[TBL]** or **[TRBL]**. The keypad will emit a Confirmation Beep. To disable this mode, press the **[TBL]** or **[TRBL]** key again. The keypad will emit a Rejection Beep.

TEST REPORT

[ENTER] + **[INSTALLER/MASTER CODE]** + **[MEM]**

Sends the "Test Report" report code programmed in section **[211]** to the central station.

CALL WINLOAD SOFTWARE

[ENTER] + **[INSTALLER/MASTER CODE]** + **[BYP]**

This feature is used to establish communication between the control panel and a computer using the WinLoad Software. After entering this mode, the control panel will dial the telephone number programmed in section **[150]**.

CANCEL COMMUNICATION

[ENTER] + **[INSTALLER/MASTER CODE]** + **[STAY]**

Cancels all communication until the next reportable event. If the Master Code was used, only communication with WinLoad would be cancelled.

ANSWER WINLOAD SOFTWARE

[ENTER] + **[INSTALLER/MASTER CODE]** + **[FORCE]**

Forces the control panel to pick-up an incoming telephone call.

APPENDIX A - ADEMCO CID REPORT CODE LIST (PROG.)

If using the Ademco Contact ID Programmable code format, enter the 2-digit hexadecimal value from the table below **(Prog. Value)** into sections [160] to [213] to program the desired report codes. **To enter a 0 value press the [FORCE] key.**

CID#	Reporting Code	Prog. Value
MEDICAL ALARMS - 100		
100	Medical Alarm	**01**
101	Pendant Transmitter	**02**
102	Fail to Report In	**03**
FIRE ALARMS - 110		
110	Fire Alarm	**04**
111	Smoke	**05**
112	Combustion	06
113	Water Flow	07
114	Heat	08
115	Pull Station	09
116	Duct	0A
117	Flame	0B
118	Near Alarm	0C
PANIC ALARMS - 120		
120	Panic Alarm	0D
121	Duress	0E
122	Silent	0F
123	Audible	10
BURGLAR ALARMS - 130		
130	Burglary	11
131	Perimeter	12
132	Interior	13
133	24-Hour	14
134	Entry/Exit	15
135	Day/Night	16
136	Outdoor	17
137	Tamper	18
138	Near Alarm	19
GENERAL ALARMS - 140		
140	General Alarm	1A
141	Polling Loop Open	1B
142	Polling Loop Short	1C
143	Expansion Module Failure	1D
144	Sensor Tamper	1E
145	Expansion Module Tamper	1F
24-HOUR NON-BURGLARY - 150 & 160		
150	24-Hour Non-Burglary	20
151	Gas Detected	21
152	Refrigeration	22
153	Loss of Heat	23
154	Water Leakage	24
155	Foil Break	25
156	Day Trouble	26
157	Low Bottled Gas Level	27
158	High Temp	28
159	Low Temp	29
161	Loss of Air Flow	2A
FIRE SUPERVISORY - 200 & 210		
200	Fire Supervisory	2B
201	Low Water Pressure	2C
202	Low CO2	2D
203	Gate Valve Sensor	2E
204	Low Water Level	2F
205	Pump Activated	30
206	Pump Failure	31
SYSTEM TROUBLES - 300 & 310		
300	System Trouble	32
301	AC Loss	33
302	Low System Battery	34
303	RAM Checksum Bad	35
304	ROM Checksum Bad	36
305	System Reset	37
306	Panel Program Changed	38
307	Self-Test Failure	39
308	System Shutdown	3A
309	Battery Test Failure	3B
310	Ground Fault	3C
SOUNDER/RELAY TROUBLES - 320		
320	Sounder Relay	3D
321	Bell 1	3E
322	Bell 2	3F
323	Alarm Relay	40
324	Trouble Relay	41
325	Reversing	42
SYSTEM PERIPHERAL TROUBLES - 330 & 340		
330	System Peripheral	43
331	Polling Loop Open	44
332	Polling Loop Short	45
333	Exp. Module Failure	46
334	Repeater Failure	47
335	Local Printer Paper Out	48
336	Local Printer Failure	49
COMMUNICATION TROUBLES - 350 & 360		
350	Communication	4A
351	Telco Fault 1	4B
352	Telco Fault 2	4C
353	Long Range Radio	4D
354	Fail to Communicate	4E
355	Loss of Radio Supervision	4F
356	Loss of Central Polling	50
PROTECTION LOOP TROUBLES - 370		
370	Protection Loop	51
371	Protection Loop Open	52
372	Protection Loop short	53
373	Fire Trouble	54
SENSOR TROUBLES - 380		
380	Sensor Trouble	55
381	Loss of Super. -RF	56
382	Loss of Super. - RPM	57
383	Sensor Tamper	58
384	RF xmtr. Low Battery	59
OPEN/CLOSE - 400		
400	Open/Close	5A
401	O/C by User	5B
402	Group O/C	5C
403	Automatic O/C	5D
404	Late to O/C	5E
405	Deferred	5F
406	Cancel	60
407	Remote Arm/Disarm	61
408	Quick Arm	62
409	Keyswitch O/C	63
REMOTE ACCESS - 410		
411	Callback Request Made	64
412	Success - Download Access	65
413	Unsuccessful Access	66
414	System Shutdown	67
415	Dialer Shutdown	68
ACCESS CONTROL - 420		
421	Access Denied	69
422	Access Report By User	6A
SOUNDER RELAY DISABLES - 520		
520	Sounder/Relay Disabled	6B
521	Bell 1 Disable	6C
522	Bell 2 Disable	6D
523	Alarm Relay Disable	6E
524	Trouble Relay Disable	6F
525	Reversing Relay Disable	70
COMMUNICATION DISABLES - 550 & 560		
551	Dialer Disabled	71
552	Radio xmitter Disabled	72
BYPASSES - 570		
570	Zone Bypass	73
571	Fire Bypass	74
572	24-Hour Zone Bypass	75
573	Burg. Bypass	76
574	Group Bypass	77
TEST/MISC. - 600		
601	Manual Trigger Test	78
602	Periodic Test Report	79
603	Periodic RF Xmission	7A
604	Fire Test	7B
605	Status Report to Follow	7C
606	Listen-in to Follow	7D
607	Walk Test Mode	7E
621	Event Log Reset	7F
622	Event Log 50% Full	80
623	Event Log 90% Full	81
624	Event Log Overflow	82
625	Time/Date Reset	83
626	Time/Date Inaccurate	84
627	Program Mode Entry	85
628	Program Mode Exit	86
631	Exception Schedule Change	87

APPENDIX B - ADEMCO CID REPORT CODE LIST (ALL CODES)

System Event	Default Contact ID Report Code when option [3] is on in section [136]	System Event	Default Contact ID Report Code when option [3] is on in section [136]
Arming with Master Code (##)	3 4A1 - Close by user	Auxiliary supply trouble	1 3AA - System trouble
Arming with User Code (##)	3 4A1 - Close by user	Bell output current limit	1 321 - Bell 1
Arming with Keyswitch (##)	3 4A9 - Keyswitch Close	Bell absent	1 321 - Bell 1
Auto Arming	3 4A3 - Automatic Close	Clock lost	1 626 - Time/Date inaccurate
Arm with PC software	3 4A7 - Remote arm/disarm	Fire loop trouble	1 373 - Fire trouble
Late To Close	3 4A4 - Late to Close	Wireless Transmitter Low Battery	1 384 - RF xmtr. low battery
No Movement	3 4A4 - Late to Close	Wireless Transmitter Supervision Loss	1 381 - Loss of super. - RF
Partial arming	1 574 - Group bypass	Module fault	1 333 - Expansion module failure
Quick arming	3 408 - Quick arm	Printer fault	1 336 - Local printer failure
		Fail to communicate with central station	1 354 - Fail to communicate
Disarm with Master Code (##)	1 4A1 - Open by user	Wireless Transmitter Low Battery	1 384 - RF xmtr. low battery
Disarm with User Code (##)	1 4A1 - Open by user	TLM trouble restore	3 351 - Telco 1 fault restore
Disarm with Keyswitch (##)	1 4A9 - Keyswitch Open	AC Failure restore	3 3A1 - AC loss restore
Disarm after alarm with Master Code (##)	1 4A1 - Open by user	Battery Failure restore	3 3A9 - Battery test restore
Disarm after alarm with User Code (##)	1 4A1 - Open by user	Auxiliary supply trouble restore	3 3AA - System trouble restore
Disarm after alarm with Keyswitch (##)	1 4A9 - Keyswitch Open	Bell output current limit restore	3 321 - Bell 1 restore
		Bell absent restore	3 321 - Bell 1 restore
Auto Arming Cancellation	1 4A5 - Deferred Open/Close	Clock programmed	3 626 - Time/Date Reset
Disarm with PC software	1 4A7 - Remote arm/disarm	Fire loop trouble restore	3 373 - Fire trouble restore
Disarm after an alarm with PC software	1 4A7 - Remote arm/disarm	Wireless Transmitter Low Battery	3 384 - RF xmtr. low battery
		Wireless Transmitter Supervision Loss	3 381 - Loss of super. - RF
Zone Bypassed (##)	1 57A - Zone bypass	Module fault restore	3 333 - Expansion module failure restore
Zone alarm (##)	1 13A - Burglary Alarm	Printer fault restore	3 336 - Local printer failure restore
Fire alarm (##)	1 11A - Fire alarm	Fail to communicate with central station	3 354 - Fail to communicate restore
Zone alarm restore (##)	3 13A - Burglary Alarm Restore		
Fire alarm restore (##)	3 11A - Fire alarm Restore	Cold Start	1 3A8 - System shutdown
		Test Report engaged	1 6A2 - Periodic test report
Panic 1 - Emergency	1 12A - Panic alarm	PC software communication finished	1 412 - Successful - download access
Panic 2 - Medical	1 1AA - Medical alarm	Installer on site	1 627 - Program mode Entry
Panic 3 - Fire	1 115 - Pull Station	Installer programming finished	1 628 - Program mode Exit
Recent closing	3 4AA - Open/Close		
Global zone shutdown	1 574 - Group bypass		
Duress alarm	1 121 - Duress		
Zone shutdown (##)	1 57A - Zone bypass		
Zone tampered (##)	1 144 - Sensor tamper		
Zone tamper restore (##)	3 144 - Sensor tamper restore		
AC Failure	1 3A1 - AC loss		
Battery Failure	1 3A9 - Battery test failure		

PRINTER MODULE (APR3-PRT1)

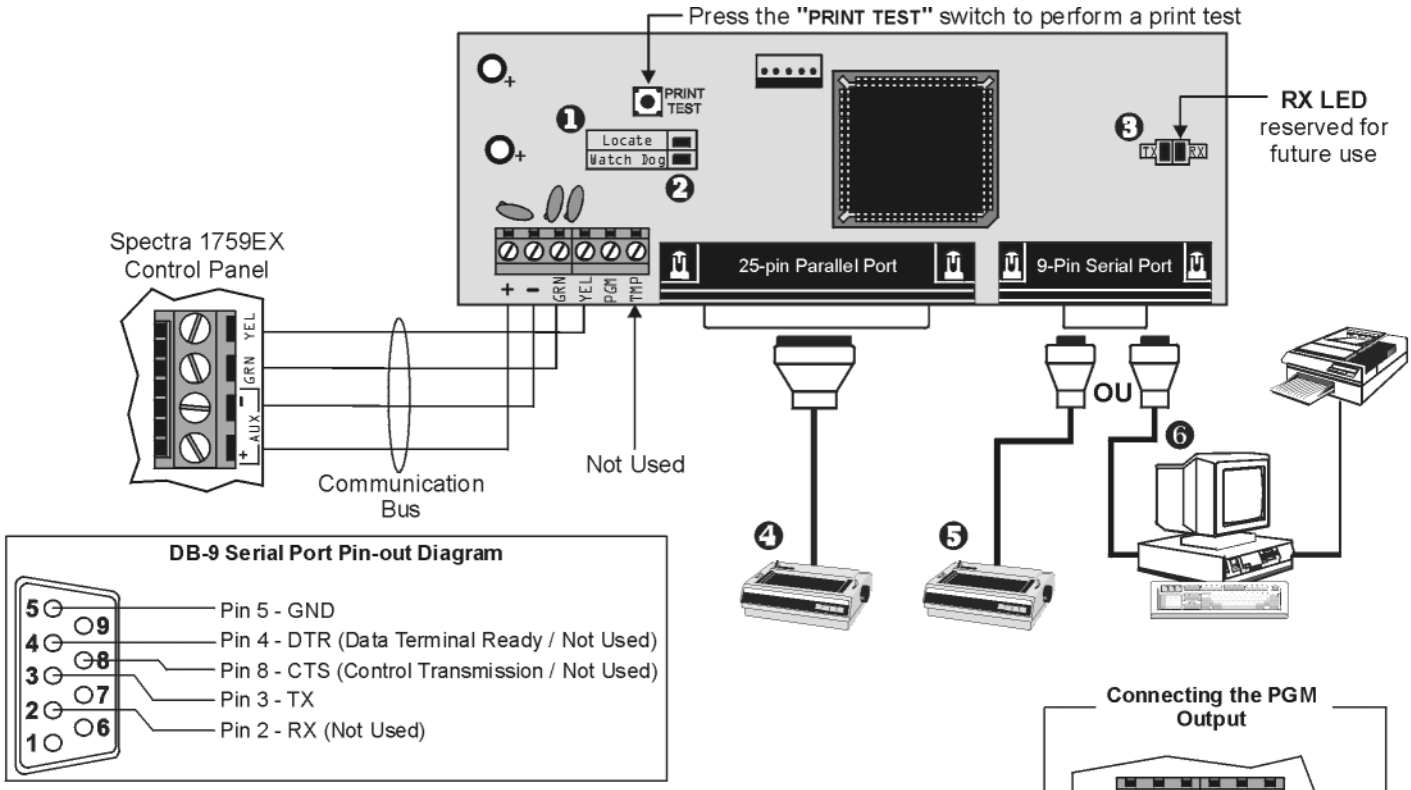

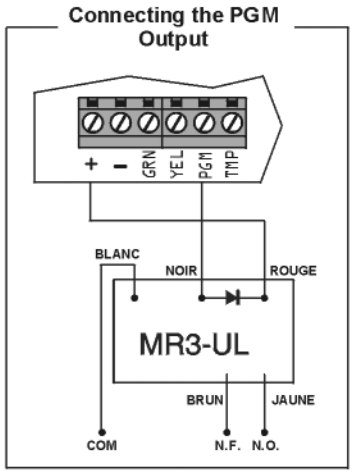

❶ **Green "Locate" LED:** Remains illuminated during power up

❷ **Red "Watchdog" LED:** Flashes to indicate proper operation. If there is a communication failure, the red LED will flash ON for one second and OFF for one second.

❸ **Red "TX" LED:** Flashes when the Printer Module is transmitting data through the serial port only.

❹ **25-Pin Parallel Port:** Connect the Printer Module's 25-pin parallel port to any dot matrix printer. **Note: The dot matrix printer must support a minimum of 80 columns.**

❺ **9-Pin Serial Port:** Connect the Printer Module's 9-Pin serial port to a dot matrix printer. **Note: The dot matrix printer must support a minimum of 80 columns.**

❻ **9-Pin Serial Port:** Connect the Printer Module's 9-pin serial port to a computer's COM port to view the control panel's events on the computer's monitor. The events displayed on the monitor can then be printed through the printer connected to the computer.

Remove AC power and battery before adding APR3-PRT1 to the system. Do not connect any modules more than 250 feet (76m) from the control panel. Only one Printer Module can be connected per Spectra control panel.

4-PGM OUTPUT MODULE (APR3-PGM4)

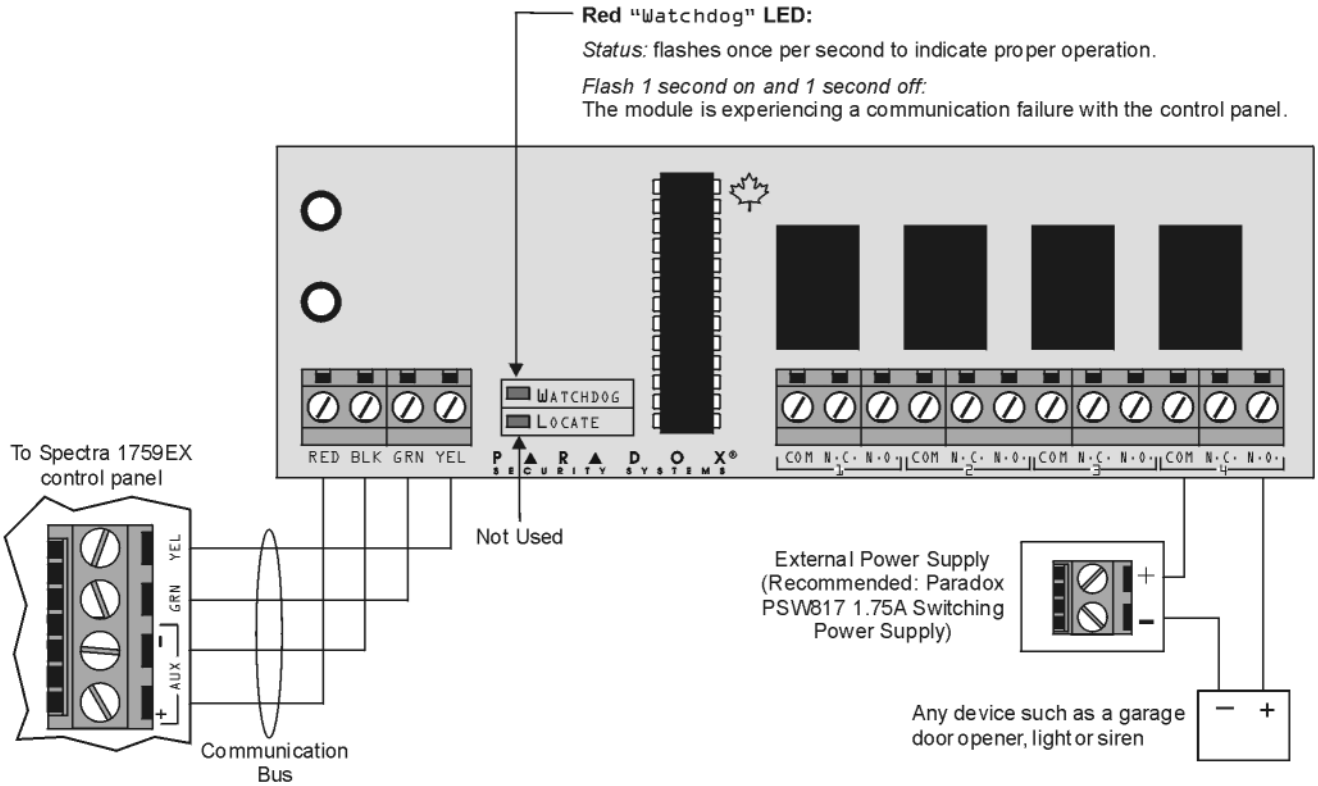

Remove AC and battery from the control panel before adding the 4-PGM Output Module to the system. Do not connect the APR3-PGM4 more than 250 feet (76m) from the control panel. Only one APR3-PGM4 can be connected per Spectra control panel.

4-ZONE EXPANSION BUS MODULE (SPC-ZX4 AND APR3-ZX4)

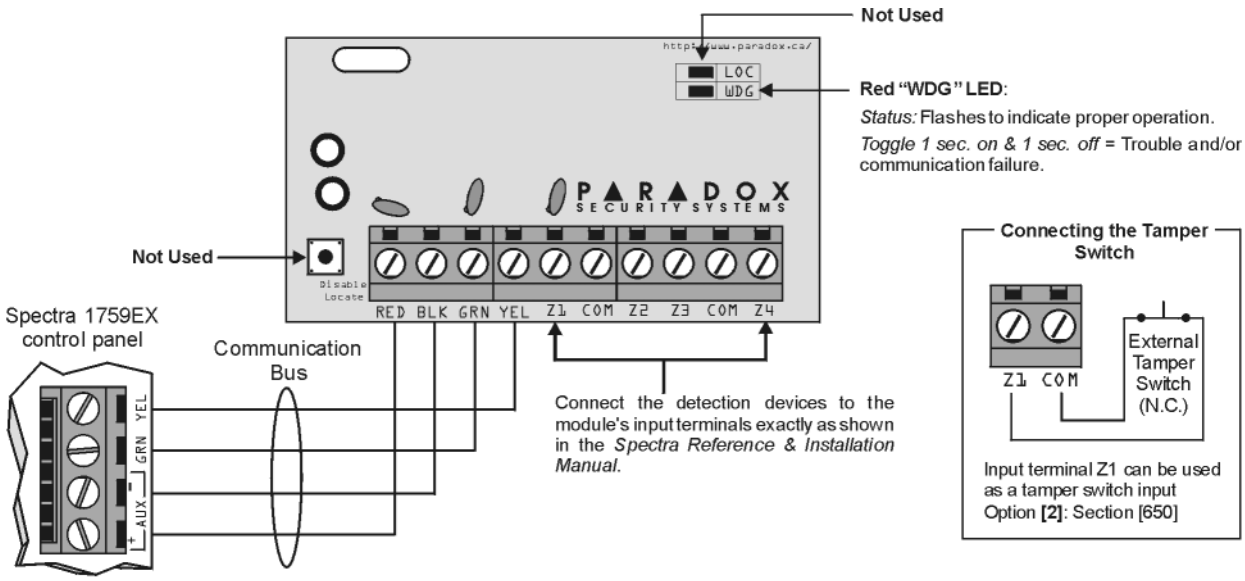

Remove AC and battery power from the control panel before connecting the module to the communication bus. Do not connect the APR3-ZX4 or SPC-ZX4 more than 250 feet (76m) from the control panel. Only one APR3-ZX4 or one SPC-ZX4 can be connected per Spectra control panel.

Remove AC and battery power from the control panel before adding the APR3-ADM2 module to the system. Do not connect the APR3-ADM2 more than 250 feet (76m) from the control panel. Only one APR3-ADM2 can be connected per Spectra control panel.

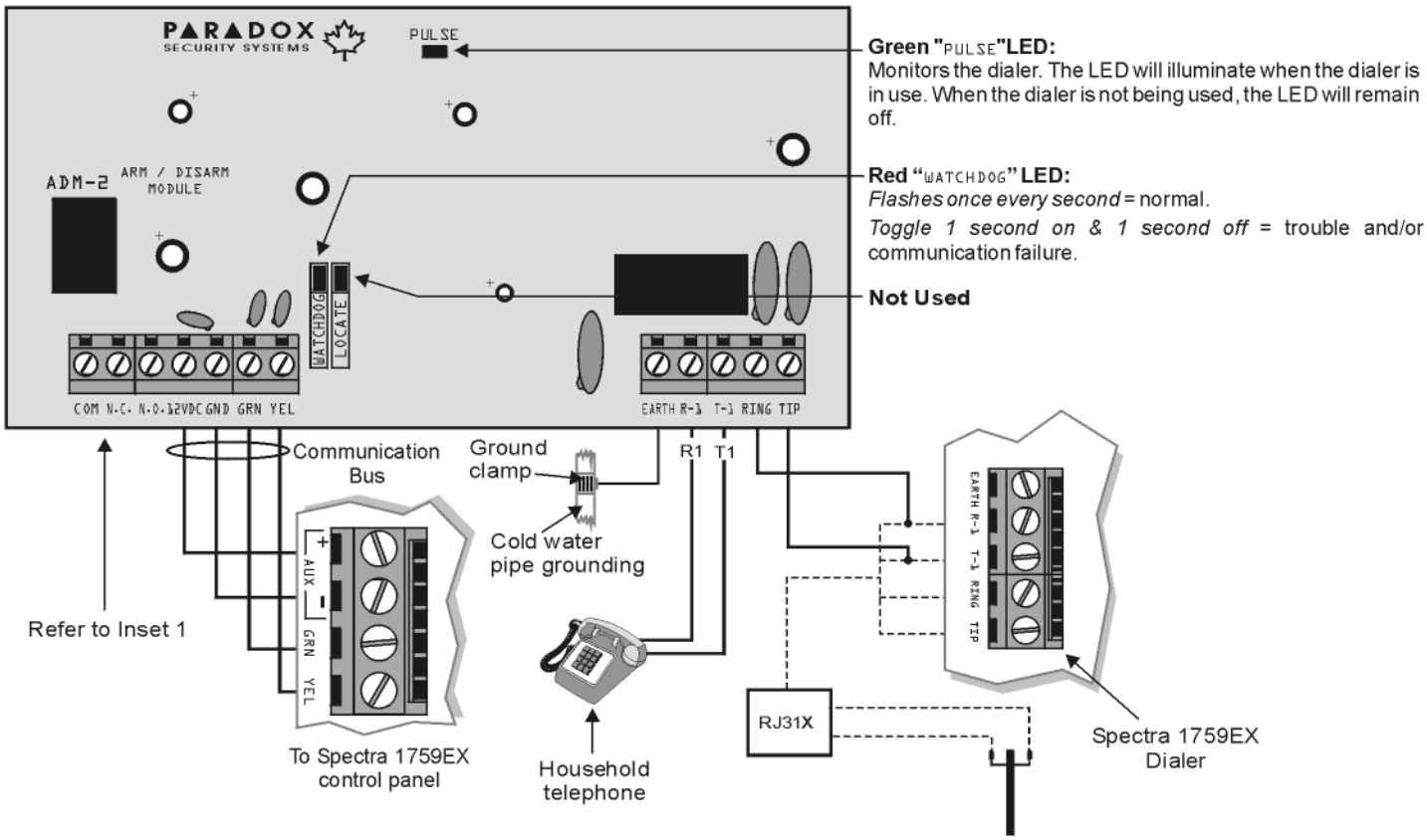

Inset 1: Connecting the APR3-ADM2 PGM Output

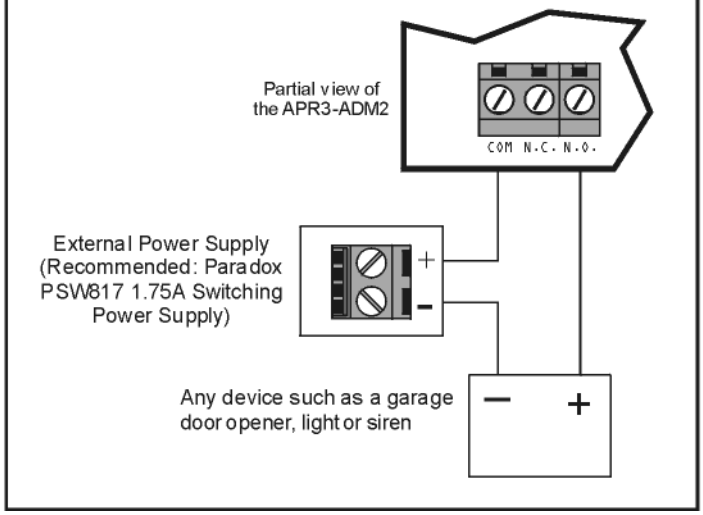

8-ZONE EXPANSION BUS MODULES (SPC-ZX8 AND APR3-ZX8)

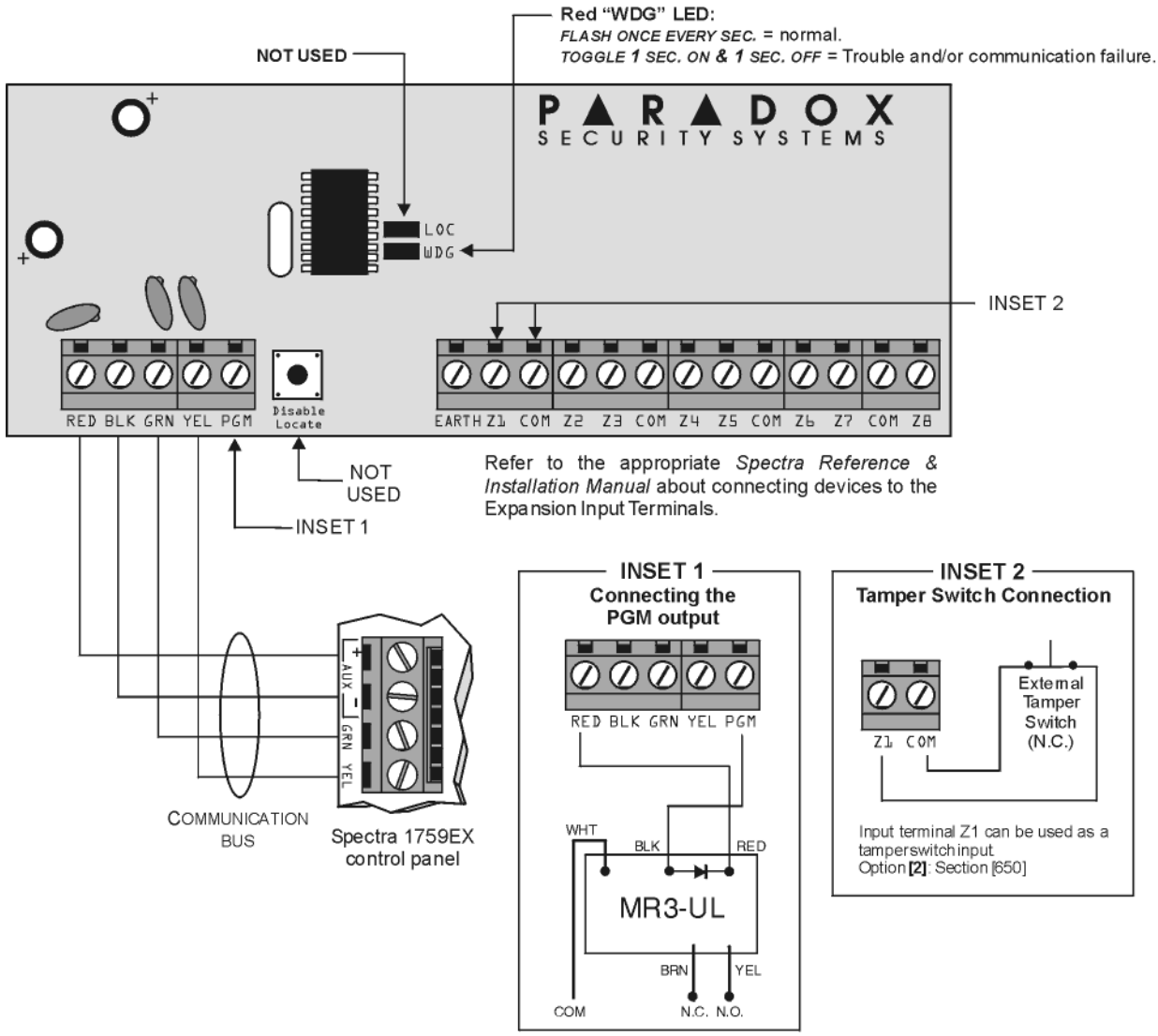

Remove AC power and battery before adding a module to the system. Do not connect the APR3-ZX8 or SPC-ZX8 more than 250 feet (76m) from the control panel. Only one SPC-ZX8 or APR3-ZX8 can be connected per Spectra control panel.

SINGLE ZONE INPUTS

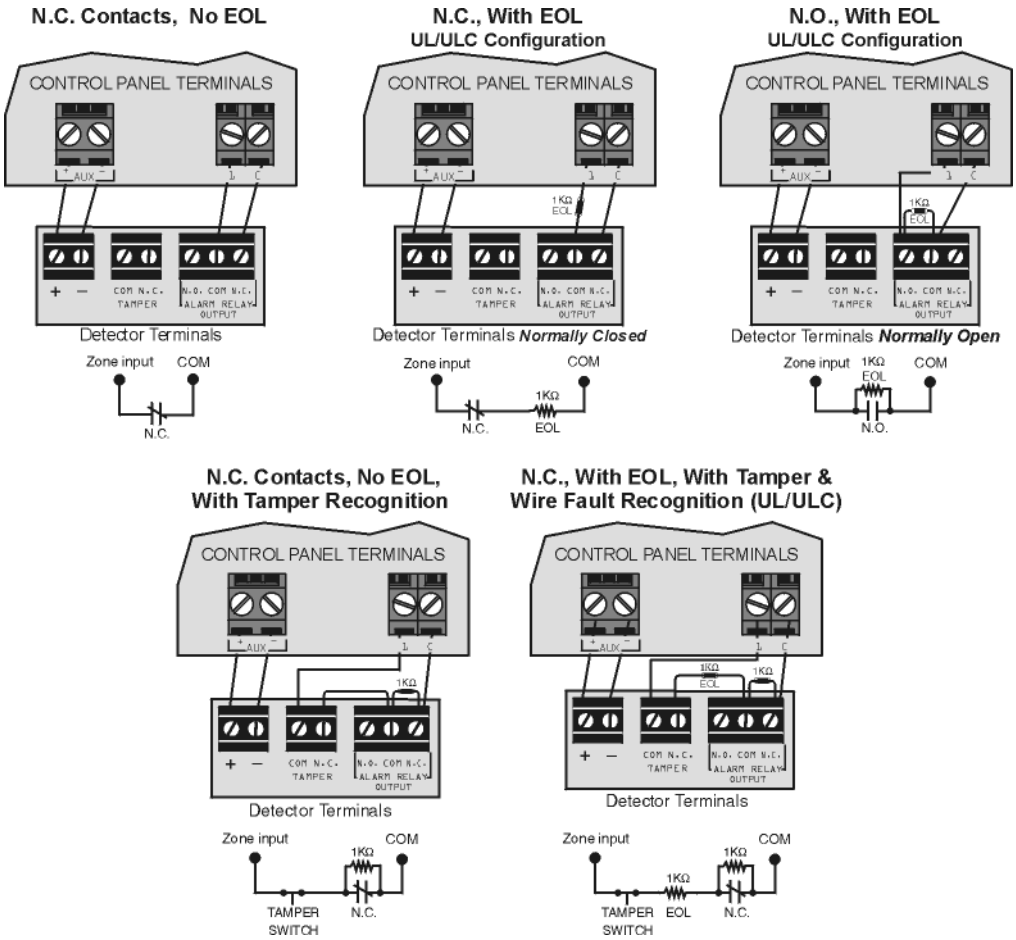

CONNECTING FIRE CIRCUITS, KEYSWITCHES AND PGMS

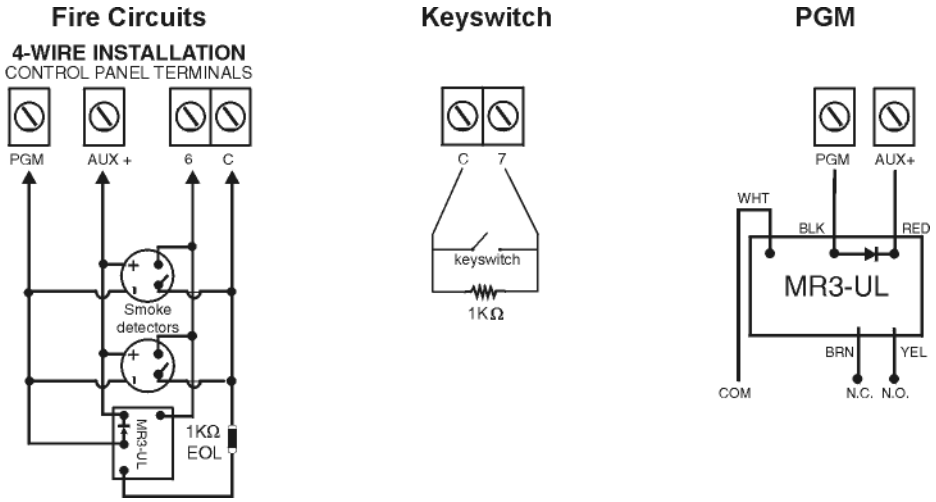

ALARM RELAY AND PGM CONNECTIONS

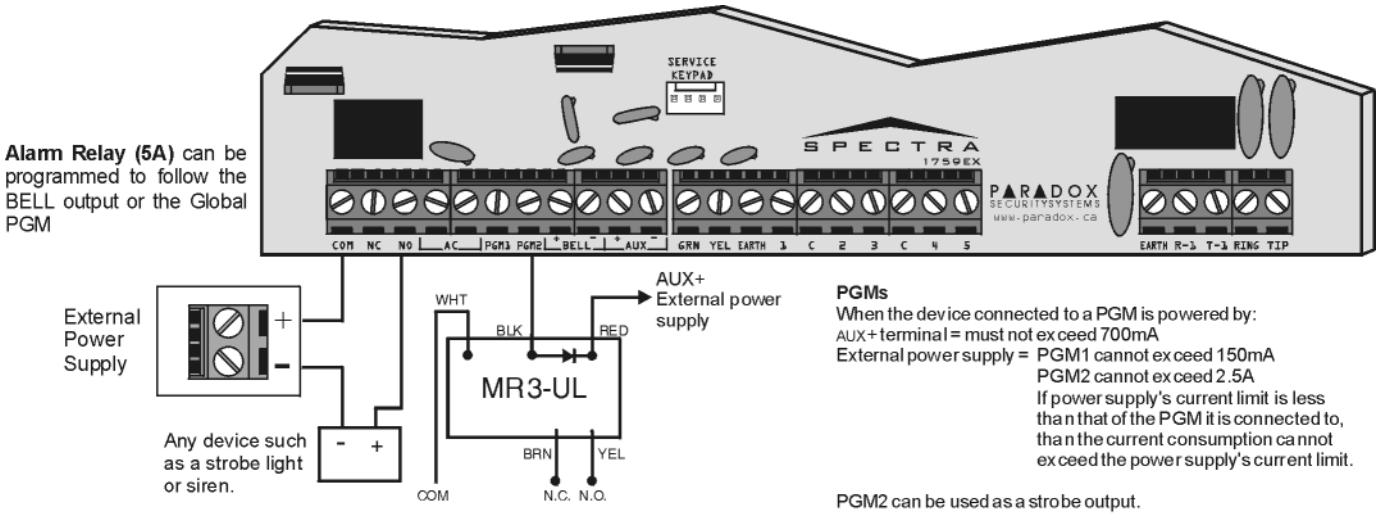

CONNECTING MORE THAN TWO KEYPADS

If there are more than two keypads connected to the control panel and at least one keypad zone is being used, connect as shown and program as described in the *Spectra Control Panels Reference & Installation* manual.

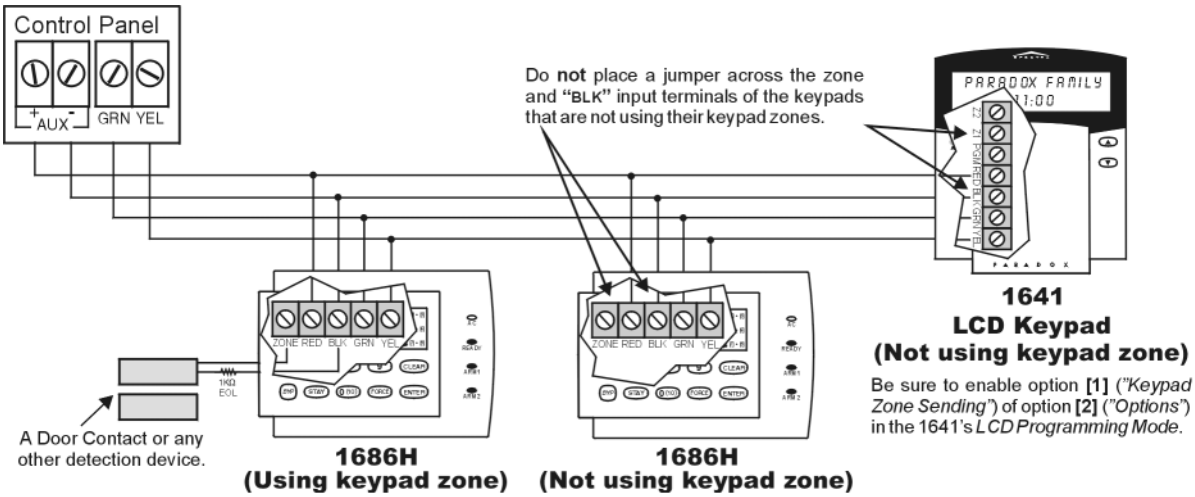

AC POWER & BACKUP BATTERY CONNECTIONS

UL Warning:
A 12Vdc / 7Ah battery is required to comply with UL fire requirements.

Caution:
Disconnect battery before replacing the fuse.

Rechargeable Battery
UL/ULC - 12Vdc / 4Ah or 7Ah

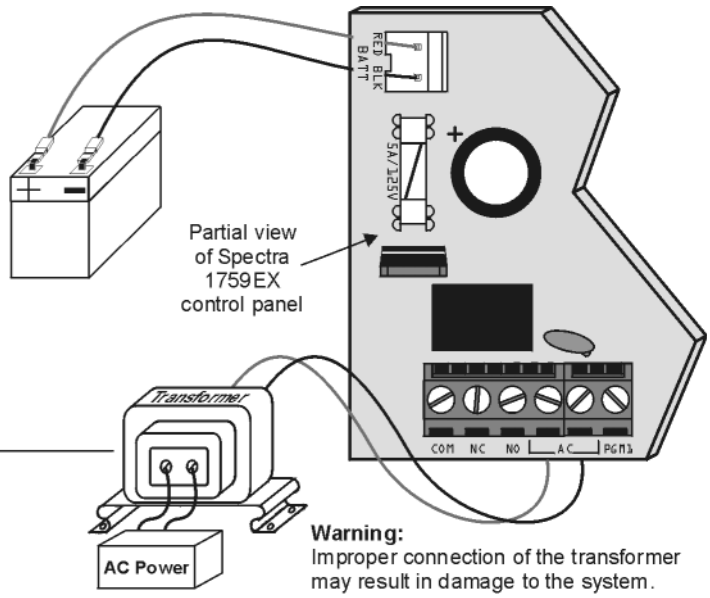

Transformer Requirements Table

Transformer:	Amseco XP-1620 16VAC **20VA***	Recommended: 16VAC **40VA** UL: Basler BE156240CAA007
Spectra DC Power Supply rated at:	1.2A	1.5A
Auxiliary Supply can provide a maximum of:	typ: 600mA max: 700mA	typ: 600mA max: 700mA UL installations: typ. 200mA
Acceptable Battery Charge Currents (section [127] option [5])	350mA	350mA / 700mA

** - Not verified by UL.*

SPECTRA 1759EX PCB LAYOUT

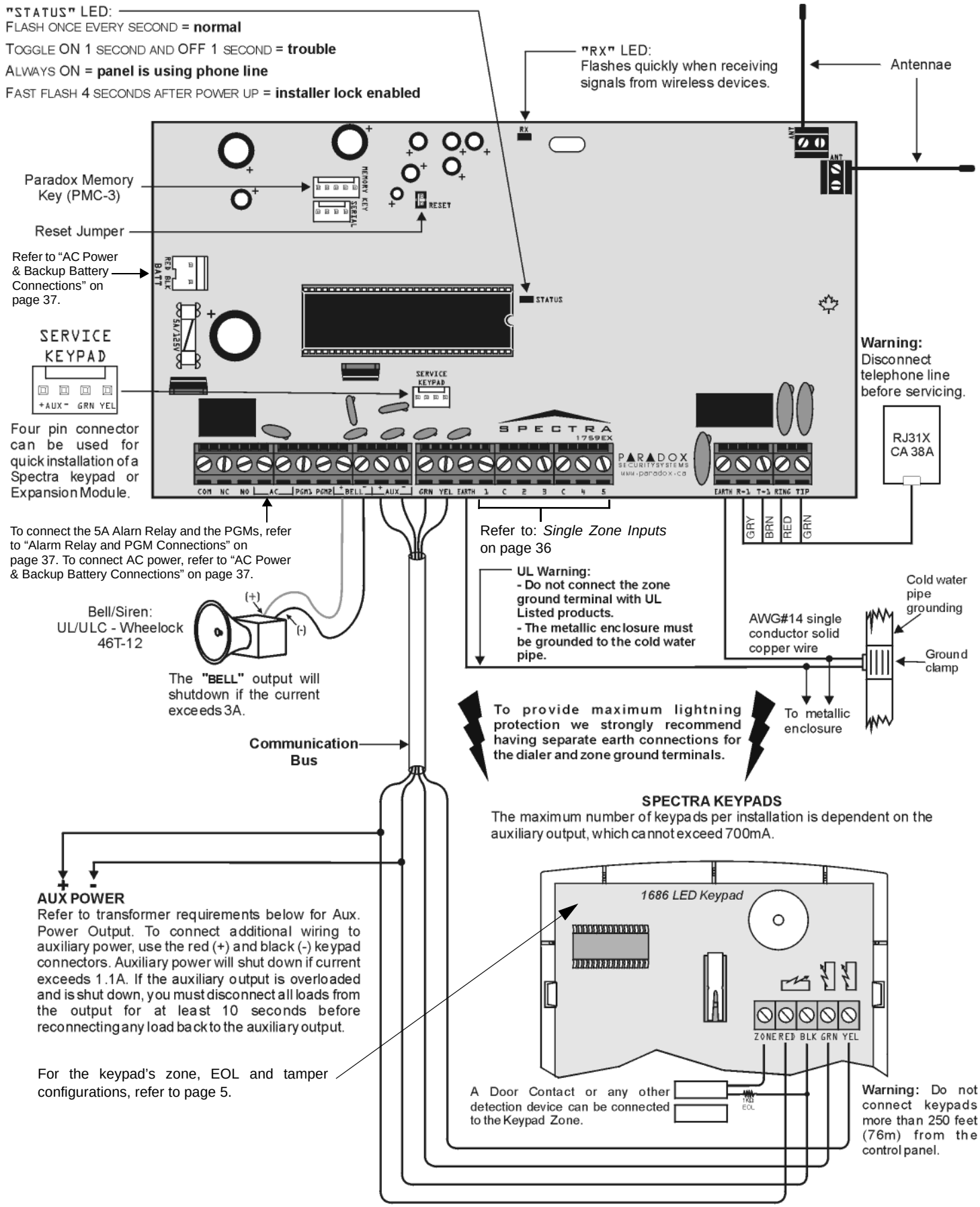

On UL Listed Systems, all outputs are rated at 11.3V to 12.6Vdc. All outputs are Class 2 or power-limited, except for the battery terminal.The Class 2 and power-limited fire alarm circuits shall be installed using CL3, CL3R, CL3P, or substitute cable permitted by the National Electrical Code, ANSI/NFPA 70.

PARADOX®
SECURITY SYSTEMS
780 Boul. Industriel, St-Eustache, Montréal, Québec, Canada J7R 5V3
Fax: (450) 491-2313 **www.paradox.ca**

PRINTED IN CANADA 02/2002 1759EX-EP00

Made in CANADA